The Telecommunication Journal of Australia

VOL. 4, NO. 4

Registered at the General Post Office, Melbourne,
for transmission by post as a periodical.

JUNE, 1943

CONTENTS

THE POSTAL ELECTRICAL SOCIETY OF VICTORIA

Continued from Cover iii.

(d) When stripping the sheath and laying back the cable, the cable cores should not be damaged.

(e) Laying back should be done neatly and each layer bound with tape.

(f) Jointing of the conductors should be carefully done to ensure good clean contacts between wires to be jointed, but that contacts with other wires or the sheath are not possible due to paper sleeves not being in the correct position or excessive length of twist of the conductors. Open circuits due to loose twisting or excessive stress on conductors leading to wire breakage should be guarded against.

(g) Binding up should be firm, but not too tight.

(ii) After the jointing is completed, identification of the cable pairs at the next branch joint should be undertaken to guard against incorrect layout and transposed or split pairs. I.R. tests should be carried out from time to time to ensure that dampness has not entered the cable.

(iii) When the lead sleeve is wiped, the workmanship of the plumbing should be tested by using CO2 gas applied through a small hole specially made in the sheath. The pressure used should be 20 lbs. A froth of soft soap applied to the sleeve will detect any escape of gas.

Q. 4.—(a) How would you calculate the bending moment at minimum temperature of an unstayed angle pole? Assume a case with a pole having not less than 4 arms of 200 lb. per mile trunk wires. Neglect wind pressure and show your calculations to determine the stress in the stay wire.

What size of stay rod and stay wire would you use assuming the breaking weights of stay rods and stay wire are:—

Stay Rods	Breaking Weight	Stay Wire	Breaking Weight
	lb.		lb.
⅝″ x 6′	12,000	7/20	1,190
¾″ x 8′	19,000	7/18	2,100
1″ x 8′	32,000	7/16	3,700
		7/14	5,500
		7/12	9,100

(b) A stay is to be fitted to the pole in (a). What instructions would you issue to ensure that the stay is fitted correctly and to ensure the stay is placed in the correct position on the pole and in the ground?

A.—(a) The bending moment of a pole is the product of the horizontal stress placed upon the pole due to the line wires and the height above ground level of the point of application.

Assuming the case of an unstayed angle pole having an included angle of $2\theta°$ with four arms spaced at d_1, d_2, d_3, and d_4 ft. above ground level and an equal tension T in each of the 32 wires.

The bending moment

$$Bm = 16T\,(d_1 + d_2 + d_3 + d_4)\,\text{Cos}\,\theta$$

Assume that $2\theta° = 135°$,

$d_1, d_2, d_3, d_4 = 21', 18'\,8'', 16'\,4'', 14'$

and $T = 260$ lbs.

Assume also that the stay is fitted at the resultant point of the pole and the angle which the stay wire makes with the pole = 45°. Then the stress in the stay wire

$$= \frac{32T \times \text{Cos}\ 67\tfrac{1}{2}°}{\text{Cos}\ 45°}$$

$$= \frac{32 \times 260 \times 0.3827}{0.7071}$$

$$= 4500 \text{ lb. approx.}$$

Therefore, allowing a factor of safety of 4, a ¾″ x 8′ stay rod and two 7/12 wires should be used.

(b) The first consideration is to fit the stay to the resultant point of the pole after allowing for development during the life of the pole. In this case, the arms are assumed to be equally loaded and spaced, the resultant point therefore is midway between the second and third arms.

The bisection of the angle should be set out next as follows:—

Two points equi-distant (say 30′) from the angle pole are measured each way in the direction of the line. The ends of a piece of rope are held at these points and when the rope is taut, the mid-point then bisects the angle of the route.

The hole for the eyebolt should be bored horizontally through the pole so as to bisect the angle. The angle of elevation of the stay should next be decided. This, except in cramped locations, should not be less than 45° to the horizontal. The angle should be lined so that a minimum of 2″ clearance exists between the stay wire and any line wire.

The stay hole should be sunk approximately 4′ 6″, and the hole undercut in the direction of the pole so that the full area of the stay plate bears up against undisturbed earth. When the stay rod and plate have been placed in the hole, the rod is set to line up with the eyebolt using a bar to ease it into position. The stay wire is then rove through the thimble of the eyebolt, and cut to a length sufficient for a double length to the bow tightener, plus approximately two feet on each end for terminating. The bow tightener being placed on the stay rod so that the nut screws only to the full depth of the nut on the stayrod.

The stay wire is terminated to the stayrod by laying back both lengths around the thimble, unlaying each end back to the thimble, then taking one strand of each length in turn wrapping it tightly and evenly around the remaining strands. The first eight strands should be wrapped a minimum of seven turns, and the remainder six turns. To prevent spreading of the stay wire at the eyebolt, the two lengths of staywire should be bound together with approximately 15 turns of a single strand of the staywire.

The eyebolt is next tightened so that the eye bears against the pole. The stay is then tightened so that when the full tension is placed upon the line wires the pole is held in a perpendicular position. "Rake" in the pole should be avoided.

The
Telecommunication Journal
of Australia

Vol. 4, No. 4 June, 1943

SOME DEVELOPMENTS IN MATERIALS USED IN TELECOMMUNICATION*

S. H. Witt, M.I.E.(Aust.), A.M.I.E.E., F.I.Rad.E

Fundamentally, telecommunication is the process of conveying information by means of modulated electric currents and modulated electric wave propagation. In the construction of telecommunication apparatus and systems it is necessary to have current carrying materials, namely, conductors, and other substances which will confine the energy to a desired path, that is to say, insulators. At the transmitting end, at the receiving end and often also at intermediate points, magnetic materials either are essential or at least are necessary to the achievement of convenient forms of apparatus, and, of course, parts of apparatus and plant must be designed to cooperate mechanically, to be held together structurally and to be protected against adverse influences.

A classification of telecommunication materials for purposes of discussion is, therefore:—

(a) Conducting materials.
(b) Insulating materials.
(c) Magnetic materials.
(d) General constructional materials.

(a) **Conducting Materials:** All metals are conductors and of these pure silver is the best. Silver is occasionally used for fine windings of small transformers and miniature type instruments. In America, it is now being used for the windings of transformers and for busbars to save copper rendered scarce by the war. Copper is the most widely used conducting material; in the pure state it has a conductivity, but 7% less than that of silver. It is an invariable rule that a pure metal always has a higher conductivity than the impure metal. For example, the addition to copper of so small an amount as 1% of tin reduces its conductivity to half that of the pure metal. It was claimed some years ago that single crystals of copper had a conductivity 10% greater than the ordinary pure metal, but these claims have not been verified by later experiments.

Copper produced electrolytically is of high purity and the difference in conductivity between it and the purest possible copper is only about 1 or 2% at the most. Up till recently most copper was refined by an electrolytic process, but the older "fire" refining methods have been so improved in modern times that high-grade copper can now be produced without electrolysis. The only way at present known to improve the conductivity of copper, and of other pure metals for that matter, is to reduce the temperature; that always causes a fall of the resistance, in some cases to zero ohms when the absolute zero of temperature is attained. (Zero degrees Kelvin or minus 273 degrees Centigrade.)

Copper is a very soft metal, but can be work-hardened by drawing or rolling. Hard-drawn copper is widely used for overhead telecommunication lines, but its tensile strength is still rather lower than is desirable and it is liable to failure from vibration fatigue. The tensile strength may be increased by the addition of suitable alloying constituents, but even a small addition causes a large decrease in conductivity, particularly if the alloying constituent is completely soluble in the copper, i.e., as a solid solution. Bronze wire formed by the addition of 1% of tin to copper has a conductivity of only 50% of that of copper, but a tensile strength 50% greater. This alloy was widely used instead of hard-drawn copper where increased tensile strength was necessary, but it has now been superseded by cadmium copper containing 1% of cadmium which has 83% of the conductivity of copper and about 50% greater tensile strength.

The study of the phenomenon of "precipitation hardening" in alloys has opened up possibilities of obtaining conductors with the strength of steel and conductivities approaching that of copper. The most promising of these is "Cupaloy" (0.36% chromium, 0.064% silver and remainder copper). Published figures indicate that with suitable heat treatment, which reduces the amount of chromium in solid solution, a conductivity only 6% lower than that of copper is attained, and high tensile strength is achieved. Beryllium copper is an alloy with somewhat simi-

---

* Lecture delivered before The Postal Electrical Society of Victoria on 14/12/1942.

lar properties, but it is rather expensive. Conductivities 25% to 70% of that of copper have been produced and by heat treatment the low conductivity alloys can be given steel-like qualities.

The cheapest conducting material is iron. In the purest form it has a conductivity not greater than 1/6th of that of copper; mild steel as used in galvanised form for line wire ("G.I." wire) has even lower conductivity. However, the relatively low cost and good tensile strength of G.I. wire are the reasons for its use where long spans are necessary and when its electrical losses can be tolerated.

A high order of conductivity is not the invariable aim in telecommunication plant. Resistors, for example, need for compactness a metal of high resistivity, generally also with a minimum of variation of this property with changes of temperature. An alloy of copper and nickel is most widely used for this purpose. Copper and nickel are mutually soluble in all proportions, i.e., they form solid solutions. The alloy containing 45% nickel and 55% copper has nearly the highest resistivity in the series and at the same time the lowest coefficient of variation of resistance with temperature. This alloy is sold under various trade names, such as Constantan, Eureka, Advance, Ferry, etc., and has a resistivity about 26 times that of copper. So-called nickel-silvers ("Platinoid," "German Silver"), which are alloys of copper, nickel and zinc, have been widely used in the past, but they are not as good electrically as the Constantan type. Manganin, a resistance alloy of Copper 84%, Manganese 12% and Nickel 4%, has excellent properties, its temperature coefficient of resistance approaching zero over an appreciable range of temperature. Because it is an expensive alloy its use is mainly in precision instruments.

For heating elements and for resistors where a rather large temperature coefficient is not important the nichrome series of alloys are outstanding. They have resistivities of up to 60 times that of copper and are capable of withstanding temperatures up to 1000° Centigrade for prolonged periods. No other alloys of higher resistivity and capable of being satisfactorily produced in wire form have yet been developed.

(b) **Insulating Materials:** These may be discussed under the headings—Ceramics, Plastics, Textiles and Miscellaneous.

Ceramics: Porcelain is still the most used ceramic for insulating purposes. The best high voltage porcelain consists of crystallites of mullite (aluminium silicate) with grains of quartz in an impervious glassy matrix. The elimination of the voids so common in poor porcelain is brought about by proper working and deaeration of suitable clay mixtures. Such well-prepared material forms the basis of the modern telephone line insulator.

At radio frequencies the power losses in even the best porcelain are excessive. Porcelain has a power factor of the order of 0.008 and a dielectric constant of about 6. Steatite is the most important ceramic insulator material for use at high radio frequencies. Talc, soapstone and steatite are all magnesium silicates and provided that they are of sufficient purity can be used to produce material with a power factor of 0.001 or even lower. By additions of magnesium oxide it is possible to produce a ceramic with a very low power factor approaching 0.0001 at 50 Megacycles per second, which is of the same order as that of the best Muscovite mica and of quartz.

It is possible now to obtain insulating glasses with fairly low power factors at radio frequency. These are alkali-free glasses containing heavy metals such as lead and barium, and they have power factors around 0.0005 at 1 Megacycle. A special glass "Vicor" developed by the Corning Company in U.S.A., containing about 96% Silica, has possibilities for use at radio frequencies as it has also a power factor of about 0.0005.

The power losses in an insulator are proportional to both the power factor and the dielectric constant, so that it is desirable to keep both these factors low. For use in condensers where the insulator is the dielectric a high dielectric constant would be desirable, as the dimensions could be kept small. Such a material is available in Titanium dioxide, which in various ceramic compounds can give dielectric constants of up to 100.

Plastics: Plastics may be divided into two classes—Thermosetting and Thermoplastic. The Phenolic or phenol formaldehyde ("bakelite") type of thermosetting resins are the most used. Phenol or a Phenol-Cresol mixture is reacted with formaldehyde to give a resin in a partially polymerized form. This may be mixed with a filler of wood dust or a powdered mineral for ordinary moulding purposes. The reaction takes place in the moulding press under heat and pressure, thereafter the compound cannot be resolved into its constituents; hence the term "thermosetting." If paper or cotton fabric sheets are impregnated with the resin and then made up in multiple layers and heated under pressure we have the SRVP (synthetic resin, varnished paper) boards and fabric boards now so widely used for electrical purposes. An interesting recent development is "Improved Wood," which consists of layers of plywood sheets impregnated with a phenolic resin and then cured under heat and pressure, giving a dense compact board of fine appearance and good electrical qualities.

Phenolic resins are now being used in the manufacture of telephone handsets and parts. Urea-formaldehyde resins have been used for producing coloured handsets, but they are liable to develop contraction cracks due to loss of moisture produced in resinification.

Thermoplastics consist essentially of chain-like molecules and are not greatly altered in structure by the heat-moulding process, whereas the thermosetting resins react to increase the molecule size forming three dimensional molecular networks which are comparatively rigid, and after formation are not greatly affected by the further application of heat. Rubber is the oldest of the organic thermoplastics and has been extensively used for insulation of wire. The performance of rubber at higher frequencies, especially for submarine cable insulation, has been greatly improved by the removal of the rubber resins and proteins and using the remaining purified rubber hydrocarbon as the basis of compounds such as "paragutta" and "K gutta." The reconstructed dielectrics have permitted the design of underwater telephone cables having speech-channel capacities and lengths undreamt of with the older gutta-percha insulation. The Bass Strait telephone cable is an example of this new development.

Ebonite consists of rubber with about 30% of sulphur combined with it. The performance of ebonite is improved for certain purposes by the addition of a suitable loading material. Dehydrated talc has been found to be the best loading for high frequency purposes, and this material has been widely used in radio equipment, although it has its limitation as the power factor is of the order of 0.006, which is rather high.

The spectacular developments in the modern art of plastics are largely the result of the ability to control processes that produce very large molecules — macromolecules. Numerous synthetic chain molecules of great size have been produced commercially in recent years with molecular weights up to 100,000. It has been found that the hydro-carbon chain molecules, that is, combinations of carbon and hydrogen, have outstanding properties at the highest radio frequencies. Ordinary paraffin wax is a mixture of chain molecules, of which the simpler components consist of a chain of 20 or more linked carbon atoms with the appropriate number of hydrogen atoms linked to the carbons to satisfy the free linkages on the carbon atoms thus:

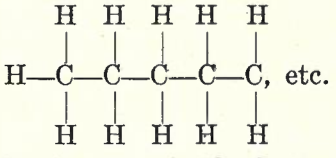

$$\begin{array}{ccccccccccc} & & \text{H} & & \text{H} & & \text{H} & & \text{H} & & \text{H} \\ & & | & & | & & | & & | & & | \\ \text{H} & - & \text{C} & - & \text{C} & - & \text{C} & - & \text{C} & - & \text{C}, \text{ etc.} \\ & & | & & | & & | & & | & & | \\ & & \text{H} & & \text{H} & & \text{H} & & \text{H} & & \text{H} \end{array}$$

This simple structure is the basis of many of the most interesting of the thermoplastics and synthetic rubbers recently developed, as the hydrogen atoms are replacable by other atoms or groups of atoms. Purified paraffin waxes and oils from petroleum have at high radio frequencies power factors of the order of 0.0001 and even lower. Paraffin wax has poor mechanical properties. This is related to the comparatively small size of the molecule.

By replacing with chlorine one-quarter of the hydrogen atoms in a paraffin chain we obtain polyvinyl chlorides, of which the basic structural unit is:

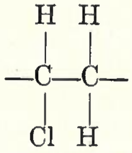

$$\begin{array}{ccccc} & \text{H} & & \text{H} & \\ & | & & | & \\ - & \text{C} & - & \text{C} & - \\ & | & & | & \\ & \text{Cl} & & \text{H} & \end{array}$$

In practice this material is produced by polymerizing vinyl chloride C_2H_3Cl. Polyvinyl chloride with a suitable softener or plasticizer is now widely used as an insulating coating for wire, the coating being extruded on to the wire as it passes through the extrusion nozzle of a special press. It is non-inflammable and is known by such names as Koroseal, Mipolam, Flamenol and Nylex. As this material is not a pure hydrocarbon its power loss at high frequencies is rather high.

By the replacement of one-quarter of the hydrogens of the paraffinic structure by benzene C_6H_6 we have polystyrene, of which the basic unit is:

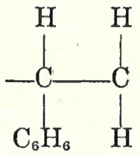

$$\begin{array}{cccc} & \text{H} & & \text{H} \\ & | & & | \\ - & \text{C} & - & \text{C} \\ & | & & | \\ & C_6H_6 & & \text{H} \end{array}$$

It is produced commercially by the polymerization of styrene. Polystyrene when properly prepared is a plastic of outstanding performance from both an insulation resistance and power loss point of view. Power factors as low as 0.0002 and specific resistance of 3 x 10^{20} ohm/cm^3 have been reported. A disadvantage of the material is that it softens at about 70° Centigrade, but by using certain loading materials this softening may be reduced. An American product, Styramic, consisting of polystyrene mixed with chlorinated diphenyl, has a much higher softening point. Since such materials are no longer pure hydrocarbons the enhanced resistance to heat is obtained at the expense of the electrical properties.

The gas ethylene C_2H_4 has the structure:

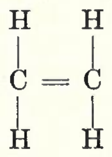

$$\begin{array}{ccc} \text{H} & & \text{H} \\ | & & | \\ \text{C} & = & \text{C} \\ | & & | \\ \text{H} & & \text{H} \end{array}$$

At very high pressure of the order of 7000 lbs. per sq. inch and in the presence of a small amount of oxygen it will polymerize or link up its molecules to form long chains with the basic unit,

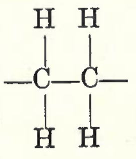

$$\begin{array}{ccccc} & \text{H} & & \text{H} & \\ & | & & | & \\ - & \text{C} & - & \text{C} & - \\ & | & & | & \\ & \text{H} & & \text{H} & \end{array}$$

forming polyethylene. Reference to this structure of the paraffin wax molecule will show that the material is really a paraffin, but as the molecules are extremely large its mechanical properties differ entirely from paraffin wax, polyethylene being a very hard, tough solid. To make it flexible it is generally mixed with polyisobutylene (Polybutene), a rubbery material with the basic chain unit of:

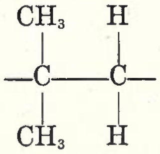

$$\begin{array}{ccc} CH_3 & & H \\ | & & | \\ -C & - & C- \\ | & & | \\ CH_3 & & H \end{array}$$

The combined material is produced in England and is known under the trade name of "Polythene." Polyethylene and Polyisobutylene both have very low power factors at ultra-high radio frequencies, and the mixture of the two (Polythene) is used in coaxial cables when very high frequencies are to be transmitted. Polyisobutylene alone is not suitable as it is liable to show cold flow.

Some of the newer synthetic rubbers have possibilities as insulating materials far surpassing those of natural rubber. Buna S is one such material, which is made by polymerizing a mixture of two hydrocarbons—butadiene and styrene. In this way desirable modifications of the properties of polystyrene and polybutadiene are produced as the copolymerization, as it is called, links the styrene and butadiene units into a chain. This process functions without the need for excessively high pressures as required for the polymerization of ethylene. These pure hydrocarbon copolymers have been developed in America under the trade name of "Copolene" and they, like "Polythene," are used in coaxial cables for very high frequencies.

Textiles: Silk and cotton have been used for wire insulation for many years. Owing to the presence of hygroscopic salts in these materials the insulation is not very good at high humidities. In the case of cotton these salts may be removed by washing. Cotton may be considerably improved by acetylation; such cotton is known as Cotopa.

The artificial silks have also found service as insulation; mostly these silks are regenerated cellulose or are spun from extruded filaments of cellulose acetate. Cellulose acetate films are now being widely used as insulating foil in coil winding. It eliminates the green spot corrosion often noticed on fine copper wires when paper and other insulating sheets are used.

Greater attention has been given in recent years to the insulation of coils for relays and other equipment intended for tropical use. A successful method of coil winding has been found in the use of enamelled insulated wire with no impregnation whatever, all insulation between layers, end cheeks, etc., being carried out with cellulose acetate foils or sheet.

Miscellaneous Insulating Materials: Included under this heading are the paints, varnishes, dopes and waxes used in great variety and for many purposes. The increase in knowledge resulting in and from the development of plastics is not only adding to the number of such materials, but also is causing improvement in many of the older materials.

One of these materials is the enamel for insulating magnet wire, which despite its advantages over textiles, still can give cause for dissatisfaction. These enamels are usually baking varnishes and the processes require close control. There is hope of further improvement by the use of enamels prepared from synthetic resin basis. One of these enamels is Formvar, developed in America from polyvinyl formal.

(c) **Magnetic Materials:** These are of two kinds—soft and hard. Soft magnetic materials are those which do not retain their magnetism after the removal of the magnetizing forces. Iron for cores in relays must be of high purity and high permeability. Most impurities have a hardening effect on the iron and hence cause an increase of the magnetic retentivity. So-called Swedish iron and the better grades of Lowmoor iron have been used, but in recent times the excellent qualities of Armco ingot iron is becoming recognized. Armco is the name given to an iron produced by a process which is an interesting outcome of research into the properties of pure iron. The process has been developed on a large scale by the American Iron Rolling Mills Co. Armco ingot iron has a carbon content less than 0.05%, often as low as 0.015%, and manganese about 0.02%, the iron content being about 99.8%, which is the usual figure for the best Swedish iron. Annealed Armco ingot iron is very soft, having a hardness of 70 Brinell or even lower, and it is a comparatively good conductor of electricity, its resistivity being about 6 times that of copper. Armco iron is now being produced in Australia and is being used for the cores, yokes and armatures of "3,000 type" relays.

For power transformer cores, an iron with good permeability but high resistivity is desirable in order to reduce eddy current losses. Iron with up to 4% of silicon is the most widely used core material. A recent improvement of silicon iron is the orientation of the individual crystals in the direction of rolling by means of suitable heat treatment, and the maximum permeability is attained in that direction. Such strip is wound into cores for the so-called "Spiral-core" transformers, resulting in pronounced economy of iron and reduction of overall weight. Iron crystals are of cubic structure and the direction of easiest magnetization is along the cube edge. The rolling and heat treatment are carried out in such a way as to favour this orientation along the strip. The amount of silicon in iron cannot be great as it renders the iron very brittle, but recent improvements in manufacturing methods give some hope of increasing the silicon content beyond the usual small amounts and thus the resistivity of the iron can be raised.

For transformers and loading coils in communication circuits nickel iron alloys are used. These may be divided into three classes:—

(a) The high nickel content alloys with 75% to 78% Nickel, such as Permalloy and Mumetal.
(b) The 50% iron group, including Hipernik (50% Iron, 50% Nickel) and Radio-metal (50% Iron, 45% Nickel and 5% Copper).
(c) The lower nickel content group, such as Rhometal, containing 36% Nickel.

These materials have a much higher initial permeability than silicon iron and are very sensitive to heat treatment, which must be carried out after any mechanical working has been done on them. The resistivity of these alloys is increased by the addition of small amounts of constituents, such as molybdenum, chromium, copper, etc.

The alloys in group (a) are used when the highest permeability at very low magnetizing force is required, such as the core for the input transformer of a high-gain amplifier when the power level is very low and all direct-current can be excluded. The material in group (c) has the lowest initial permeability of the three, but has the highest resistivity. It is suitable for the core of an output transformer where power levels are high and direct current may be present. The alloys of group (b) have intermediate properties.

The alloys of iron and cobalt are of great interest. "Permendur" (50% iron, 50% cobalt) has a saturation flux density greater than that of pure iron. It is an expensive alloy and has been used in electromagnets for special purposes. Its resistivity is lower than that of iron or cobalt, but is increased about 4 times by the addition of 2% of Vanadium. This alloy, "2V Permendur," is used in telephone diaphragms.

Powdered Iron Cores: For transformers and inductors for high frequency purposes iron alloy sheets become unsuitable because of excessive eddy current and hysterisis losses. But by subdividing the alloys still further, as in the powdered form, and mixing the powder with an insulant to produce insulating films between the grains, it is possible to produce satisfactory cores. Some interesting processes are used in the preparation of the powdered metals. Powdered molybdenum-permalloy is made from sheet containing a minute proportion of sulphur, which makes the alloy brittle and easily pulverized by mechanical means. A small amount of ceramic powder is mixed with the powdered iron alloy for insulating purposes and the powder is pressed to shape and heat treated.

For radio frequencies in the broadcast range, hydrogen reduced iron powder and carbonyl iron are mostly used. Until recently carbonyl iron was the best material for the higher radio frequencies, but hydrogen reduced iron is now being prepared suitable for cores for frequencies up to 100 megacycles. These powders are usually bound together with polystyrene, but phenolic resins have also been used. Carbonyl iron is produced by the decomposition of iron carbonyl vapour in a heated chamber. It is in the form of minute spheres which show a pronounced "onion-peel" structure. This material contains up to 1% carbon and 1% oxygen. Powdered iron oxides have also been used in radio cores.

Hard Magnetic Materials: The original magnet was the lodestone, which is the magnetic oxide of iron "magnetite," Fe_3O_4. Magnetic needles were first made in about 1700 A.D. from what would now be called carbon steel, that is, iron, containing 1 to 1.5% of carbon, which is hardened by quenching in water after heating. The developments in tool steels towards the end of the last century opened the way to improvements in magnets and hardened tungsten steels were found to make good magnets. Later chromium steels were also used. The introduction of cobalt steel marked a great improvement and the volume of steel required to make a magnet for a specific purpose was reduced to about $\frac{1}{4}$ of that required when the best carbon steels were used. The effect of aluminium as a hardening agent in steels had been investigated in England and America, but its effect on the magnetic properties was first noticed by Mishima in Japan, who found that an alloy of 13% Aluminium, 29% Nickel and 58% Iron gave very powerful permanent magnets. This alloy is generally known as Alni. The addition of Cobalt gave a series of alloys known as "Alnico." An outstanding development of the last three years is the production of magnet alloys which have been heat treated in a magnetic field. An alloy, "Alnico 5" (Aluminium 5%, Nickel 14%, Cobalt 24%, Copper 3% and Iron 51%), treated in this manner gives magnets of such energy content that only about 1/20th of the volume of that of a carbon steel magnet is necessary for a specific purpose. Light-moving coil microphones and telephones for headsets are now being made using this alloy.

All magnetic materials for permanent magnets must be used in the hard condition and are generally very difficult to shape on that account. Some interesting alloys have recently been produced which can be worked in a soft condition and then hardened. Remalloy (71% Iron, 12% Cobalt and 17% Molybdenum), Magnetoflex (20% Iron, 20% Nickel and 60% Copper), and Vicalloy (6-16% Vanadium, Cobalt 36-62%, and Iron 30-52%) are examples. Vicalloy can be drawn into wire or rolled into tape down to 1/200 inch thick. Some Platinum and Palladium alloys with Cobalt or Iron have been produced which give powerful magnets. The Heusler type magnetic alloys are of great theoretical interest as they are compounded of metals usually classed as non-magnetic. Manganese appears to be an essential constituent.

(d) **General Constructional Materials:** Metals are good constructional materials and were largely displacing wood, but the development of modern plastics is affecting this situation. Already many articles that were changed from wood to metal construction are now being moulded in plastics. The present-day handset telephone instrument is a notable example.

For large structures, such as radio masts, the ordinary low carbon or mild steel has been mostly used, but if some special high-strength alloy steels become less costly they will be of much value in the topmost sections of such masts. For all masts and poles, a corrosion resistant steel is desirable, but its use is at present not feasible because of high cost. A new form of fabricated steel pole is being developed in the Department which avoids many of the disadvantages of existing types. Its inherent flexibility of design permits the use of alloy steels or surface hardened steel, if and where required.

The "deep-drawing" steels as used for motor-body construction are valuable for the production by presses of frames and cases for telecommunication components. These steels, which have a carbon content of about 0.1% and manganese 0.35%, are quite soft and readily pressed, the "planished" grades having an excellent finish. By variation of design it has been found possible to dispense with many heavy castings in iron and non-ferrous metals in favour of pressings and drawings.

Among the non-ferrous materials "work-hardened" phosphor bronze and nickel silver sheet is mainly used for contact springs in relays, keys and similarly functioning components. For complicated shapes where springiness is required the "precipitation hardening" alloys, such as beryllium copper, have possibilities not obtainable with phosphor bronze and such alloys.

Beryllium copper, when quenched from about 800° C., is quite soft and workable. If, after shaping, the material is heated to about 300° C. it hardens and acquires excellent spring properties. Some of the aluminium alloys, such as Duralumin, can be given somewhat similar properties; they "age" harden appreciably at ordinary temperatures after having been softened. It is necessary to keep them in a refrigerator to prevent hardening prior to final fabrication. Duralumin is an aluminium alloy containing about 4% silicon. It has been used for diaphragms of telephone transmitters.

Pig Lead is still favoured for cable sheathing. Commercial pig lead is of very high purity, but is liable to "fatigue cracking" if subjected to vibration in transit or where installed. Lead containing 0.8% Antimony is much more resistant to deterioration from vibration.

War necessity has resulted not only in an increase in the production in Australia of materials, the manufacture of which was already well established, but has also caused many materials to be produced within the Commonwealth that are physically new, or at least their production here is a new enterprise. Among these are materials of particular value in telecommunications, some of which have been discussed in this article. The following list brings together a few of these:—

(1) Soft copper wire, hard-drawn copper wire, cadmium copper wire, galvanized mild steel wire.
(2) Armco ingot iron, silicon iron sheet, Armco motor-body steels, B.H.P. structural steel.
(3) Porcelain and glass insulators, high frequency steatite insulators.
(4) Phenolic and Cresylic synthetic resins and moulding powders.
    Synthetic resin varnished paper and fabric boards.
    Improved wood (synthetic resin penetrant).
    Ebonite, loaded and unloaded.
    Cellulose acetate.
    Polystyrene.
(5) Permanent magnet alloys Alni and Alnico.
(6) Powdered iron for inductor cores.
(7) Enamel insulated wire; cotton, silk, rubber and polyvinyl chloride coated wire.
(8) Phosphor bronze and nickel silver sheet.
(9) Pig Lead, Antimony Lead.

The writer wishes to acknowledge with thanks the assistance of Mr. O'Donnell, M.Sc., of the Research Laboratories, in the preparation of these notes.

References

Nickel copper alloys: — Publication R1, Mond Nickel Co.

Cupaloy: — The Electric Journal, March, 1938, p. 107.

Beryllium copper alloys: — General Electric Review, June, 1935, p. 297.

Low loss ceramics: — Electronics & Television, 1941, p. 102, p. 158, p. 301.

Electrical properties of H.F. ceramics:—Rosenthal, Electronic Engineering, 1941, p. 388, p. 438.

Chemistry of Synthetic Resins (2 Vols.):—Ellis.

Synthetic rubber: — Circular C.427, Bureau of Standards, U.S.A.

Ebonite for electrical purposes:—Siemens' Engineering Supplement, May, 1942.

Cellulose acetate yarn for wire insulation:—Bell Laboratories Record, 1942, p. 123.

Formex wire:—General Electric Review, 1942, p. 285.

Alloys of Iron and Nickel (Vol. 1):—Marsh.

Alnico General Electric Review, 1942, p. 210.

Survey of magnetic materials:—Legg. Bell System Technical Journal, 1939, p. 438.

CARAVAN TELEGRAPH STATIONS

E. J. G. Bowden, V.D., and V. T. Judd

In view of the possibility of damage by enemy action to Telegraph Offices on long and vital Defence routes, two trailer type "Caravan" Telegraph units have been designed and fully equipped in South Australia, and are held at strategic points.

Each unit consists of a sturdy two-wheel trailer unit with internal dimensions of 11 ft. 6 ins. x 6 ft. 6 ins. x 6 ft. 6 ins. high. Fig. 1 shows the external side view of one of the caravans. Externally the two caravans are similar except for camouflaging, which is designed to suit the type of country in which each unit will be used in emergency.

The following external features are illustrated in Fig. 1:—

Steel support for top awning, permitting sliding portion of roof to be opened in almost any weather.

Door and windows fitted with fly wire, and black-out screens.

Ventilating louvres at ends of battery lockers.

Spare wheel, which is normally stored inside the caravan.

Other external features not shown on the figure are:—

Line terminal and arrester block, with weather-proof cover, mounted at the rear of the caravan.

Earth bar and terminal fitted below the arrester block.

Socket for connection of D.C. power from portable engine generator.

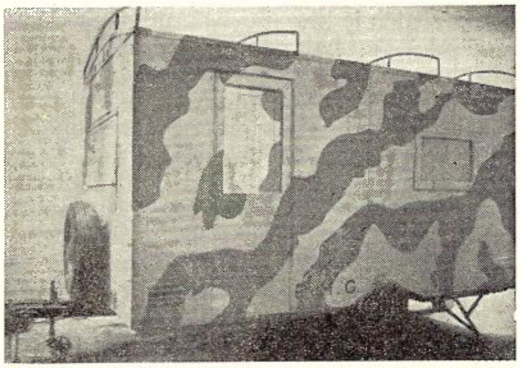

Fig. 1.

One unit is designed primarily for use as an intermediate station on a long route, and provides for the following:—

Two sets of repeaters each capable of connecting two physical circuits together (Fig. 2), but convertible by throwing switching keys to four repeaters capable of joining four carrier circuits to four physical lines. One of the physical to physical repeaters is provided with "extended locals," i.e., keys and sounders are extended to four operating positions on the tables. This represents the equivalent of two duplex terminals. In turn, one of the duplex terminals may be operated as two straight-out carrier terminals. This provides a very flexible arrangement.

Test and patch panel. This follows standard Departmental practice, and is illustrated in Fig. 3. Single 2-part plugs and jacks are used. A common milliameter is provided for testing purposes.

Power circuits. The power board is also illustrated in Fig. 3, and further details are given later.

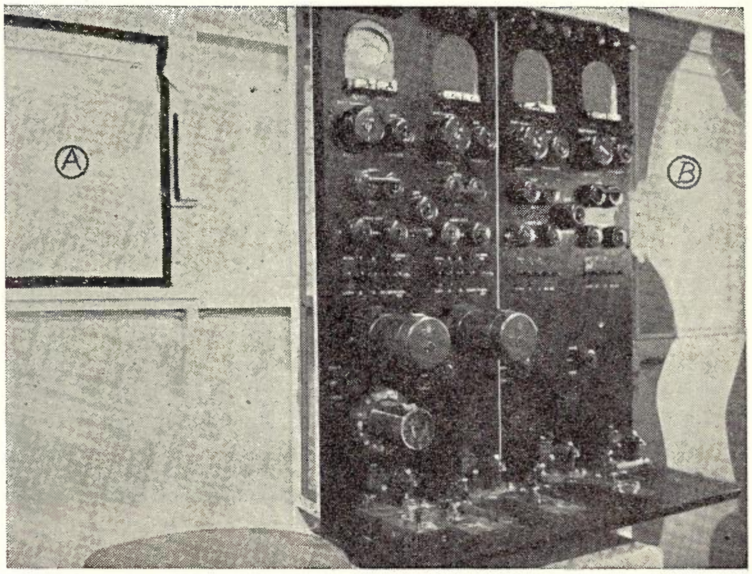

Fig. 2.

The other unit will normally be used as a terminal station and provides for:—

Two physical/carrier duplex terminals sets.

Two physical/carrier repeaters, copper-oxide rectifier type.

One Morse set for back-stop working.

One Morse set, closed circuit working.

Test and patch panel.

Power circuits. These are simpler than in the "Intermediate" caravan as a 220 volt D.C. "Tarpen" engine generator was available.

Figs. 2 and 3 illustrate details of the internal arrangement of the "Intermediate" caravan. Fig. 2 shows the main panel, mounting the two physical/physical repeaters. When photograph was taken several pieces of apparatus were not available. Black-out screens are in use on window (A) and door (B). The inside of the door is camouflaged as it would normally remain open.

In Fig. 3 the following features are evident:—

(A) Type of overhead wiring adopted.

(B) Test and patch panel—later two 4012A transformers were fitted at top of panel to enable "Cailho" circuits to be derived.

(C) Charging panel, adapted for use of 32 volt "Delco" engine generator. Switches are provided to permit the necessary charging in banks of suitable voltage. The lower portion of the panel is occupied by the discharge bus-bars and distribution fuses.

(D) Rear battery locker. Ventilating louvre controls (E) are seen on right and left.

Operating positions (3 and 4) with three legs only to facilitate movement of operator.

(F) Seats with rubber cushions. The boxes covering the wheels have been adapted for this purpose—stools are provided for other positions.

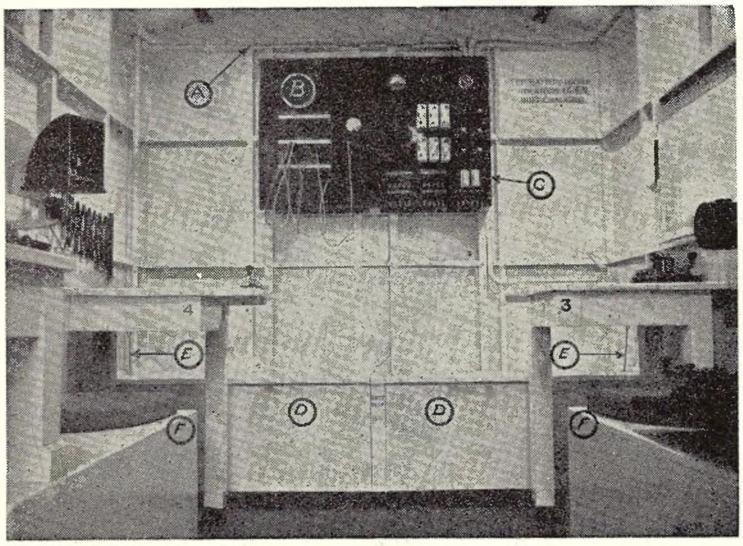

Fig. 3.

The internal arrangement of the "Terminal" caravan is generally similar to that of the "Intermediate" unit.

Power arrangements:—Each caravan is fitted with 20-12 volt car type batteries arranged 10 at each end of the caravan, in special rubberoid-lined lockers. The weight of the batteries is thus evenly distributed over the wheels. Battery supplies of 120 volts, positive and negative (earthed), 60 volts positive and negative (earthed), and 12 volts (for lighting) are all available on a power board. The charging facilities consist of:—

Intermediate unit:—One 32 volt "Delco" engine generator on a separate stand.

Terminal unit:—One 220 volt "Tarpen" engine generator on a wheeled stand.

Each charging unit is operated approximately 20 yds. from the caravan. A uniform type of portable engine generator was not available at the time. There is no trace of battery fumes inside the caravans, even when charging at the full rate.

Some features of the caravans are:—

The weight of a caravan fully loaded is approximately 1½ tons. The chassis, springs, and oversize tyres are designed to carry this weight over rough roads. The racks and angle-irons supporting the equipment and fixtures are carried through to the floor, thus reducing the load on the caravan walls. The walls are of plywood with external metal panels. Artificial line units, on account of their weight, required special mountings, but these were fitted after the accompanying photographs were taken.

The internal painting is cream throughout. Instruction notices are painted either red or black, corresponding in colour to the fittings to be handled. A writing slope and two store and stationery cabinets are fitted at the forward end of each caravan. The black-out screens are normally carried in a rack over the stationery cabinet.

Two Y-section galvanised earth rods, with reinforced heads, and fitted with terminals, are carried in each caravan, together with an axe, wood-saw, hack-saw, sledge hammer, and wheel spanner. Each caravan carries a full supply of the necessary stationery, and the equipment includes an office date stamp.

Circuit Description.

The schematic circuit of one set of repeaters of the caravan is shown in Fig. 4, the switching as shown being in position to provide a physical to physical duplex repeater and two terminating Morse sets for two carrier channels.

Duplex Physical Repeater : — Two differential duplex terminals connected to physical lines 1 and 2 through a closed circuit key are indicated by duplex set 1 and duplex set 2, each associated with its artificial line for simulating the line characteristics for balancing purposes. With the switches thrown to the repeat position the tongue of relay No. 1 is connected to the split of the duplex set No. 2 so that signals are repeated in each direction between physical lines 1 and 2.

Carrier Terminal Sets:—Position 1. Two carrier terminals may be connected to operating positions 1 and 2 as indicated by the switching in Fig. 4. Thus 60 V + and — battery is fed via the open circuit morse key to the send loop of the carrier channel. The polarised sounder connected in parallel with the carrier send loop, enables the operator to hear his own signals. The carrier receive loop is terminated in a polarised relay, the tongue of which controls the 900 ohm sounder circuit.

Position 2. The associated circuit is arranged on similar lines as for Position 1, except that the polechanger provides a means for the operator to hear his transmission, thereby obviating the use of a polarised sounder in parallel with the carrier send loop.

Carrier to Physical Repeater:—By the operation of the carrier switching key, the split and

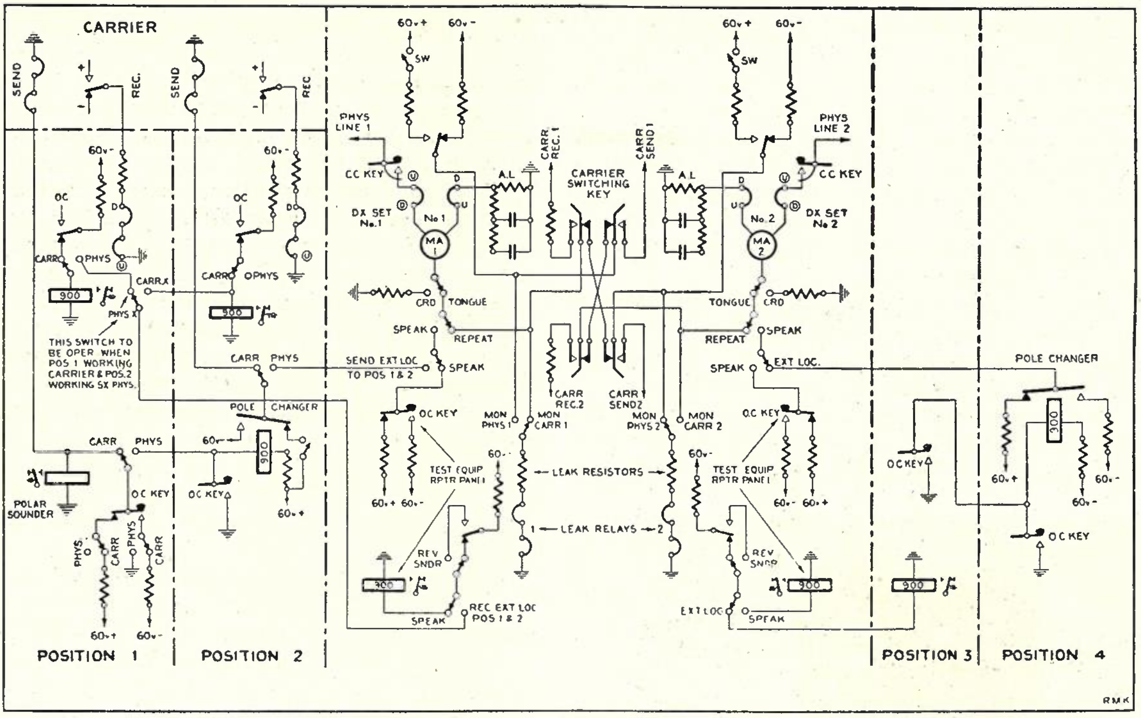

Fig. 4.—Schematic Circuit.

relay tongues of duplex sets Nos. 1 and 2 are extended to the carrier receive and send loops respectively to provide two carrier to duplex physical repeaters.

Physical duplex terminal sets : — Suitable switching enables physical lines 1 and 2 to be terminated in two duplex terminal sets. Thus operating positions 1 and 2 become the receive and send terminals respectively for physical line No. 1 and positions 3 and 4 serve in a similar capacity for physical line No. 2.

Monitoring Facilities for "Repeating" Connections:—When the repeaters are switched for physical to physical working, monitoring is effected by switching monitoring switches Nos. 1 and 2 to the "Mon. Phys." position, thereby connecting leak relays 1 and 2 to the tongues of differential relays 1 and 2 respectively. The leak relay tongues therefore control their respective sounder circuits. In the case of the repeaters being switched to provide two carrier to physical repeaters, only one monitoring leak relay becomes available per repeater set. Hence the monitoring switch is operated to either the "Mon.Phys." or "Mon.Carr." position to observe transmission in either direction.

In Volumes 1 and 2 of the Telecommunication Journal a series of articles on Cable Jointing and Soldering, written by Mr. G. O. Newton, was published, whilst commencing in Volume 3, No. 3, Mr. A. S. Bundle has written a series on Aerial Line Construction. To further assist students of Lines Engineering, arrangements have been made for Mr. A. N. Hoggart, B.Sc., to write a series on Conduit Work. It is hoped to commence this series in an early issue.

POLARISED RELAY No. P.R. 10

S. T. Webster

General Description.—The Polarised Relay P.R. 10, photographs of which are shown in Figs. 1 and 2, is manufactured in the Postal Workshops, Melbourne. In this relay, the polarising medium consists of two "Alni" permanent magnets, with soft iron extension pieces, mounted one on each side of the line winding bobbins. The permanent magnets are arranged so that at their upper ends similar poles are placed opposite to each other with the spindle of the armature arranged centrally between them. The lower end of each magnet is clamped to the lower extremity of its associated line winding core, the whole assembly being fixed to a brass frame which is carried on a phenol fibre base fitted with banana plugs to provide a jack in mounting.

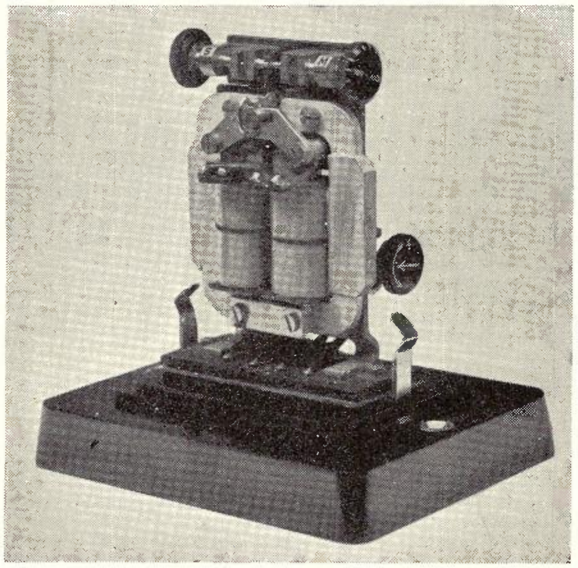

Fig. 1.

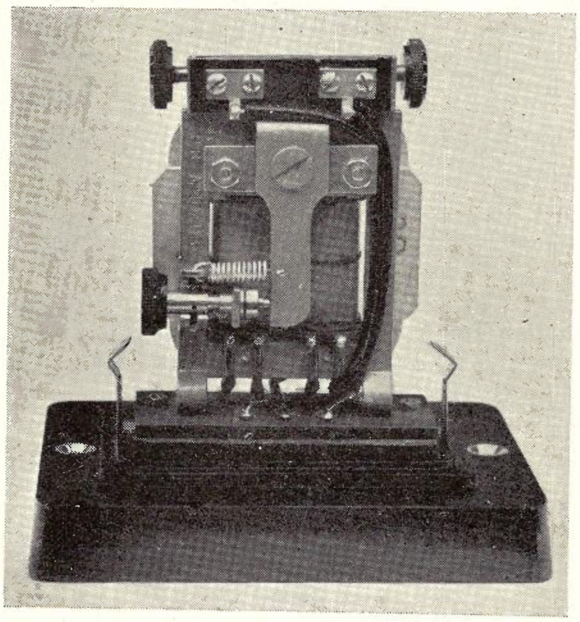

Fig. 2.

The soft iron armature, which carries a phosphor bronze extension fitted with platinum contacts, is free to move between the vertical faces of the two line winding cores, but is prevented from coming in actual contact with them by residual pips in the armature. When correctly adjusted, the movement of the armature in either direction is limited by the contacts in the armature extension striking the platinum contact tips of the contact screws. The heads of the contact screws are graduated in divisions, a radial movement of one division in a clockwise direction corresponding to a forward movement of the screw of one mil.

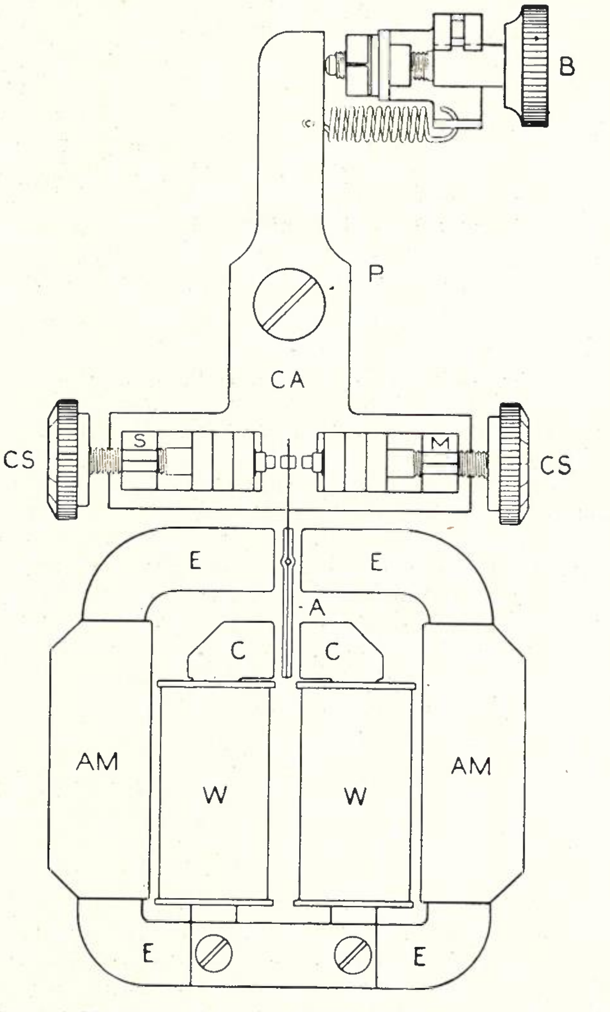

AM—Alni Magnets. E—Alni Magnet Extensions. CS—Contact Screw. CA—Contact Carriage. B—Bias Adjusting Screw. C—Cores. W—Windings. A—Armature. P—Pivot Screw.

Fig. 3.

The contact screws are fixed to a carriage which is pivoted on a shouldered screw situated at the rear of the frame, and this carriage can be rotated about this point through a small angle by means of a bias adjusting screw, the end of which is in contact with the lower end of a tongue extended from the contact screw carriage. The general arrangement is shown diagramatically in Fig. 3.

Theory of Operation.—It will be seen by reference to Fig. 4 that there are two separate magnetic circuits with the armature common to both. As the two magnets of any relay are selected as a balanced pair, it follows that, in the ideal case, if the armature were held midway between the core faces, with no current flowing in the windings, the forces applied to the armature would be balanced. If the armature were moved to one side, the magnetic field on that side would be increased, due to the reduced air gap and, as a consequence, the armature would remain firmly on that side.

The windings are so arranged that the passage of current through a line winding tends to produce unlike poles at the armature ends of the two cores. Referring again to Fig. 4, a North pole is induced at the lower end of the armature, due to the polarising permanent magnets. The passage of current through the line winding from D to U will reduce the strength of the S pole at the upper end of the left hand core, whilst increasing that of the south pole on the right hand side. The armature will therefore be attracted to the right hand side, operating its extension to the spacing contact. Similarly, a reversal of current through the winding will operate the relay tongue to the Marking contact.

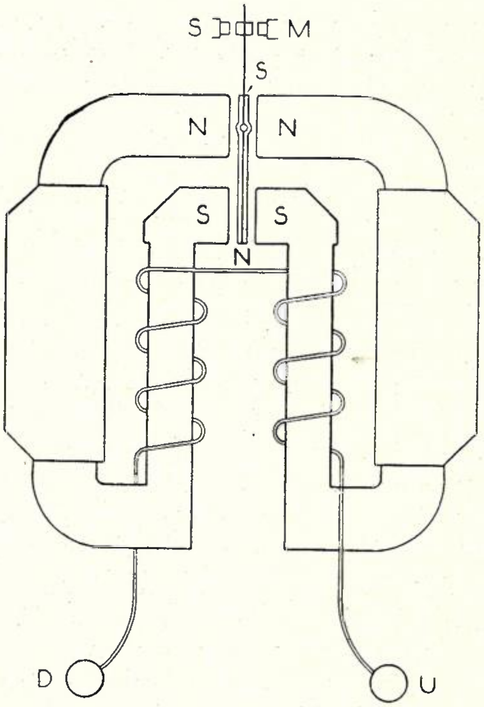

Fig. 4.

No. 1 Windings. — In the first instance the P.R.10 relay was developed for use in telegraph circuits. For this purpose, No. 1 windings are used. Each bobbin consists of an inner winding of 2,300 turns of enamel insulated 41 S.W.G. copper wire with a resistance of approximately 85 ohms and an outer winding of the same number of turns of similar wire with a resistance of approximately 130 ohms. The two line windings D to U and D circle to U circle, are produced by connecting an inner winding of one bobbin to the outer winding of the other bobbin in agreeing series in each case. Each line winding is therefore approximately 215 ohms resistance, and by this method of connection, a comparatively high degree of differentiality is obtained.

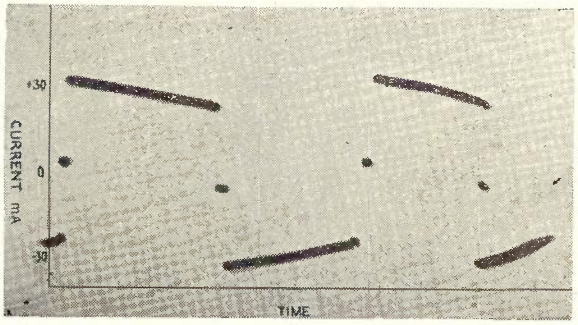

Fig. 5.

Performance.—After manufacture, each relay is examined by means of an oscilloscope for freedom from contact rebound over, in the case of relays with No. 1 windings, a range from 5 milliamps to 20 milliamps through both line windings in series. An oscillograph of the current in the relay armature circuit during such a test is shown in Fig. 5. This test was conducted with square wave reversals at a transmission speed of 56 bauds, and a line current of 15 milliamps, which represents a normal operating condition. With a transmission speed of 56 bauds, each signal element is of 18 milliseconds duration. The lines opposite +30 and —30 represent a current flow of 30 milliamps positive and negative in the relay armature circuit during the spacing and marking signals respectively. The short lines opposite the zero position represent the periods of time when no potential was applied to the local circuit and consequently indicate the transit period when the relay tongue was moving between the contacts. From a comparison of the length of the transit interval with that of the signal elements, it will be seen that the former is of approximately 1.25 milliseconds duration.

As a matter of interest, an oscillograph showing faulty relay operation is depicted in Fig. 6. In this case serious contact rebound is experienced when the relay is operating from the marking to the spacing contact, while the transit interval during the spacing to marking period is of approximately 4 milliseconds duration.

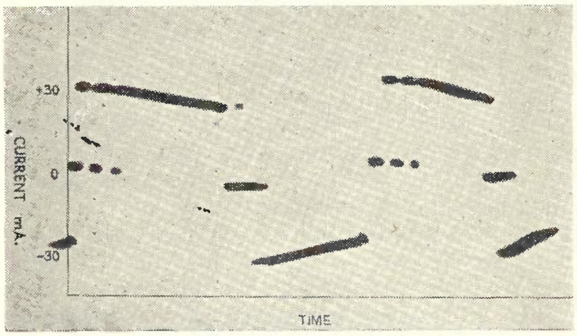

Fig. 6.

No. 2 Windings.—No. 2 Windings for the P.R. 10 relay were developed to enable its use as a receiving relay for carrier telegraph systems. In practice, this relay has to operate to marking contact under the control of the plate current of the detector tube during the carrier to line condition. This operation takes place against a spacing electrical bias. For this purpose a high degree of sensitivity is required for the operating winding, and this is obtained by connecting the inner windings of each bobbin in agreeing series. The inner winding of each bobbin consists of 5,000 turns of enamel covered 46 S.W.G. copper wire with a resistance of approximately 700 ohms so that the total resistance of this winding D to U is approximately 1400 ohms. The figure of merit of the relay with this winding is 3 to 4 milliamperes. The bias winding, D to U, consists of two outer windings, each 2900 turns of E.C. 41 S.W.G. copper wire connected in agreeing series and having a total resistance of approximately 360 ohms.

PILOT REGULATOR SYSTEM FOR A 3-CHANNEL CARRIER SYSTEM

F. P. O'Grady

Modern demands for reliable telephone and telegraph service have brought about the need for some automatic means to take care of the unavoidable variations in line losses which occur, particularly at carrier frequencies and where great distances are involved. In South Australia, for example, a 3-channel carrier telephone system with a 9-channel voice frequency carrier telegraph system superimposed on one of the channels is in operation over a line distance of 1000 miles and five intermediate repeater stations. The above wire line over this distance is necessarily subject to wide changes in weather conditions at times, particularly when sub-tropical lightning storms followed by heavy rains occur in the summer months. The normal variations in transmission loss at the carrier frequencies concerned, ranging up to nearly 30,000 cycles per second, would be such as to cause wider variations in overall loss than can be tolerated nowadays. The carrier telegraph system is particularly sensitive to variations in equivalent, as this causes bias, either marking or spacing, to occur in the individual channels and with machine printing systems these variations in bias would soon cause faulty working to occur, particularly where these systems are joined in tandem, and where the working margin on each section of the built-up connection is already fairly low. Voice frequency dialling over a distance of 1000 miles is also worthy of comment, as this is believed to be by far the longest direct dialling line in the world, the longest distance previously being of the order of 300 miles in South America and 440 miles in the case of Pt. Lincoln to Adelaide in South Australia. Voice frequency dialling systems are provided with automatic level features inherent in the receiver design, but nevertheless it is essential that the carrier system equivalent should not vary too widely.

The problem has been solved by a number of overseas manufacturers by the use of a pilot regulator system. In this system an alternating current of suitable frequency is transmitted from one terminal to the other. This frequency is chosen so that it lies between the working bands of frequencies in the 3-channel system and its amplitude is such that it does not introduce crosstalk difficulties into adjacent circuits nor cause overloading in the common repeaters and other amplifiers through which it passes along with the 3-channel system frequencies. At the receiving terminal the pilot frequency is tapped off, amplified if required, and rectified, and it is used to control a suitable mechanism which automatically changes the gain of the receiving amplifier in such a direction as to correct for any variation in loss over the line which affects the pilot frequency (along with the working frequencies of the 3-channel system).

The principal points of interest in the pilot regulator system are:—

(a) The frequency must not take up working space normally used for telephone or telegraph purposes.
(b) It must not interfere with adjacent circuits.
(c) It must not overload common amplifiers.
(d) The sending oscillator must be very stable in frequency and amplitude.
(e) The receiving pilot device must be constant in gain and stable in tuning.
(f) The pilot system must introduce minimum loss to the rest of the system.

(g) The pilot system must be sensitive to changes in amplitude so that it will follow closely the variations in line equivalent.

All of the above requirements have been met in the Western Electric 2B pilot regulator system which is used on the J12 carrier system Melbourne-Sydney and on the CS system Melbourne-Adelaide and Adelaide-Perth, recently installed. This system is adequately described in journals referred to in the list of references at the end of this article. The difficulty of obtaining imported material under present conditions has forced attention to the possibility of building up some pilot regulator locally, which if not equal to the 2B system would be capable of reasonably satisfactory service and a description of an experimental installation on the Adelaide-Alice Springs carrier system may be of interest.

The Western Electric Company has made use of the Weston Sensitrol Relay as a voltage sensitive device to control the movement of the pilot regular which, in its case, takes the form of a motor-driven condenser which acts as a capacity potentiometer or attenuator and varies the gain of the receiving amplifier. The Sensitrol Relay has the very great advantage that when the tongue makes contact with the lower or upper fixed contact it is firmly held by a magnetic device which ensures that a very firm and positive contact is assured instead of the rather fluttering contact which normally occurs with a high and low voltage relay when it drifts over to one contact or the other. With a Sensitrol Relay, once the tongue moves outside the normal working range it comes within the influence of the permanent magnet referred to and it is attracted instantly and is held firmly to the fixed contact. This device ensures a positive contact, but it obviously requires some external means of re-setting the relay after it has done the necessary work. This is effected by a small solenoid which is operated by a pulsing circuit of relays every four seconds. This solenoid, when operated, actuates the mechanism which forcibly detaches the tongue from the fixed contact and restores it to the centre position and then releases it. Naturally, if the fault condition still persists, the tongue moves back to the contact. While the contact is made, the motor-driven regulator is operating in one direction or the other trying to restore the overall equivalent to normal.

As Sensitrol Relays are not available at the present time a similar electrical feature has been obtained by making use of a 209FA telegraph relay as the voltage sensitive device. With suitable adjustment, the tongue will float freely between the marking and spacing contact and will follow ½db variations in equivalent quite well. To overcome the fluttering contact effect, use has been made of trigger valves or cold cathode gas-filled valves of the type manufactured by R.C.A. known as OA4G. These gas-filled valves are similar to the Thyratron valve in that once the grid is changed from negative to positive, the plate current will flow and it will remain flowing even if the grid is now restored to negative. The amplitude of the plate current is independent of the grid potential once the trigger or firing voltage is reached. With this arrangement, what would normally be a fluttering and unsteady contact between the tongue and the fixed contact of the 209FA relay is changed into an instantaneous steady current of fixed value in the plate circuit of the OA4G valve. An ordinary telephone type relay in the plate circuit is then operated and controls the remainder of the pilot regulator system.

Instead of the capacity attenuator of the 2B Western Electric regulator, use has been made of a non-inductive resistance attenuator which is connected to the banks of a uniselector of the automatic exchange type in such a way that the value of the attenuator is changed in ½db steps. The switch differs from the subscribers' uniselector in that it is a special B.G.E. automatic switch provided with two magnets, two ratchets and specially shaped wiper tips to permit the wipers to be rotated backwards or forwards by operating either of the two magnets. With the attenuator wired to give ½db steps, a switch with 25 steps can deal with variation in line equivalent of 12 db approximately, and this is found to be ample for the system operating over a 1000-mile circuit.

The use of the non-inductive attenuator, instead of the capacity attenuator and building out network of the W.E. system, means that all 3 channels are adjusted by the same amount by the regulator, whereas strictly speaking the higher frequency channels require a greater range of control than the lower frequency channels. It is found, however, that in the absence of sleet and snow conditions, which, by the way, are never likely to occur on this route, the variations between the lower and upper frequencies with weather are not very serious and by operating the pilot regulator somewhere near the middle of the total band in each direction, quite good results are obtained. The attenuator is wired as a single slider ladder network, as this provides the simplest arrangement for the uniselector, needing only one wiper and thus leaving the other wipers free for other functions.

The use of the 209FA telegraph relay has been found to be quite satisfactory and its sensitivity is reasonably good for the purpose. This relay has a tongue which takes the form of a spring fixed at one end and is, therefore, free from friction of pivots which occurs on other types of relays. Its maintenance of calibration with age and temperature, etc., seems to be quite satisfactory for the purpose, and in any case an occasional check can quickly be made and provision has been made for a screw-driver type of control to be used to preset the pilot regulator as required.

The circuit operation is such that the tongue of the relay normally floats between the two contacts and should a variation of more than ½ db above or below the normal figure occur the relay will make contact on one side or the other. This will immediately flash the gas tube and the associated plate current relay will operate and due to the nature of the gas tube will remain operated even if the tongue of the relay floats away again from the fixed contact. The plate current relay causes one magnet or the other to take one step which changes the attenuation by ½ db in one direction or the other. When the magnet of the switch takes one step, the plate circuit of the gas tube is broken and this restores the valve to normal momentarily. Should the change effected by the uniselector have restored the equivalent, the 209 relay will now be off the contact and the gas tube will remain out. Should the equivalent still be abnormal, however, the gas tube will immediately flash again and the switch will continue stepping and changing the attenuation ½ db at a time until normal conditions are restored. Should the switch continue in this manner until it has cut all the attenuator in or out it will come to rest on the first or last contact of the bank where the drive circuit will be cut and an alarm circuit operated to attract the attention of the maintenance staff. To deal with the case of a sudden line failure as distinct from the slow changes due to weather, a telephone relay of a special type is wired in series with the 209FA. This relay is an impulsing type relay which has been fitted with micrometer adjustment and this is arranged so that it normally remains operated on the rectified pilot current and will not release unless the pilot drops by more than 5 db. In this case, this auxiliary relay releases and rings the alarm bell. A somewhat similar device is provided by the Western Electric Company in the 2B system where a second Sensitrol Relay with a range of minus 5 and plus 3 db is used to raise an alarm in the event of sudden large changes in line conditions. It has not been possible to provide in the local equipment for an alarm to operate in the event of a sudden rise in equivalent, but as this is a somewhat rare occurrence compared with the other variations it is not regarded as an essential feature. The uniselector attenuator will take care of the slow variations and the auxiliary alarm relay will deal with a complete sudden failure.

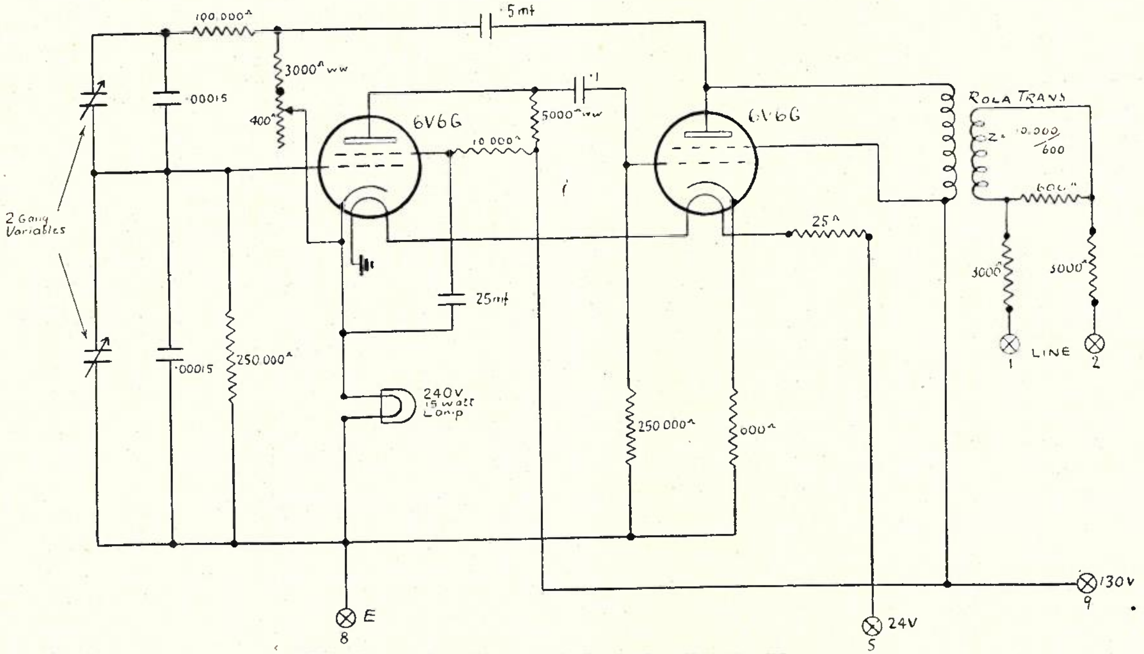

Fig. 1.—Automatic Level Control, Pilot Oscillator.

The shortage of iron dust core material for making filters has severely handicapped the design of this local regulator and it has been necessary to have recourse to a number of expedients, necessity being the mother of invention. In the first instance, it has been found practicable to use the regulator operating over the whole 1000-mile section, and there has been no necessity to tap off the pilot current at repeater stations and for separate adjustment in each repeater section. This has avoided the need for two filters and complete regulating sets at each repeater station. In order to avoid the need for special injection and tap off filters for terminals, advantage has been taken of the fact that the middle channel of the 3-channel system is designed to accommodate an 18-channel V.F. telegraph system, but only 9 channels are in use. One of the unused frequencies sufficiently far removed from the 9 working channels has been selected as a pilot frequency. The oscillator is, therefore, a voice frequency oscillator and the same frequency can be used in both directions, the 9-channel V.F. system being used in a four-wire arrangement over the 3-channel system. The oscillator has been designed to provide a highly stable output without the use of tuning inductances. This has been made possible by the use of negative feed-back as described in the Proc. I.R.E. for October, 1939, page 654. This oscillator gives remarkably constant output with changes in power supplies and valves and provides a good wave shape in the output. In order to save a sending filter, the output of this oscillator is connected to sending busbars of the 9-channel system through a high resistance pad which reduces the loss to the 9-channel system to negligible proportions. This requires somewhat greater output from the oscillator, but there is ample power available in the two valve arrangement used. The oscillator is shown in Fig. 1.

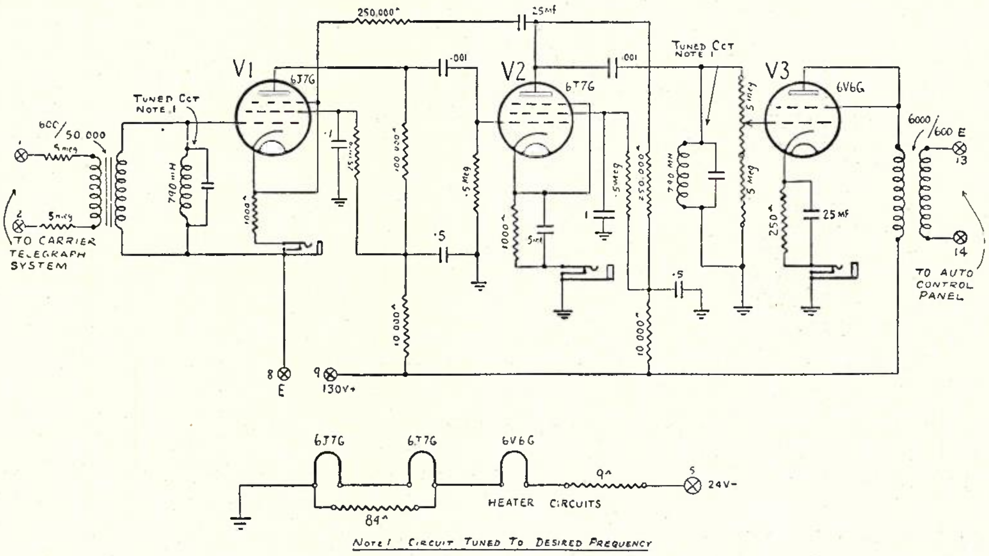

Fig. 2.—Automatic Level Control, Selective Amplifier.

At the receiving end a highly selective amplifier of constant gain has been used which also makes use of negative feed-back. The amplifier maintains a constant gain irrespective of changes in power supplies and tubes. The input to the pilot amplifier is also high resistance so that it does not cause any appreciable loss to the receiving circuits of the 9-channel system. The output of the selective amplifier is rectified and it operates the line winding of the 209FA relay and also the auxiliary alarm relay. The bias winding of the 209FA relay is operated through a ballast lamp to maintain the current in this winding constant. A simple rectifier voltmeter provides visual indication of the incoming pilot current and the only adjustment required is to set the screw-driver adjustment so that the tongue of the 209FA relay floats in the centre position when the voltmeter reads mid-scale. Two red marks on the meter scale correspond to plus and minus ½ db respectively. The adjustment of the 209FA relay is very similar to the adjustment for normal carrier telegraph working and is by no means difficult to secure and hold in practice. See Fig. 2.

The receiving circuit is tapped off the receiving side of the 9-channel V.F. system at each terminal through two high resistances as described, but the complete regulating mechanism is mounted actually on the 3-channel carrier telephone bay in order to avoid running high frequency leads outside the bay. The attenuator portion of the regulator is wired in the input of the receiving amplifier so that the regulator controls all three channels and, therefore, all 9 channels of the V.F. system simultaneously. See Fig. 3.

In addition to the close control of the equivalent of the carrier system which the regulator provides, it has proved of immense value in drawing prompt attention to line faults, particularly of the fleeting variety which are particularly baffling where a multi-channel carrier telegram system is involved. The detailed circuit operation is shown in the Appendix.

Appendix

Circuit Operations.—(See Fig. 4.) Assuming that the transmission equivalent is normal, the incoming pilot current will be sufficient to hold relay H operated. Relay H is a marginal type (micrometer adjustment) and releases when the normal level drops by 5 db or more. H1 is closed on the front contact when the pilot is normal. Contact H will, therefore, be operated to the position where the cathode circuit of the two gas tubes is closed ready for operation of the tubes. The 209FA relay will be held floating mid-way between the low and high contacts. The attenuator switch is assumed to have been placed by hand initially on the 12th contact of the 25 point bank so that approximately 5 or 6 db of the pad will be in circuit.

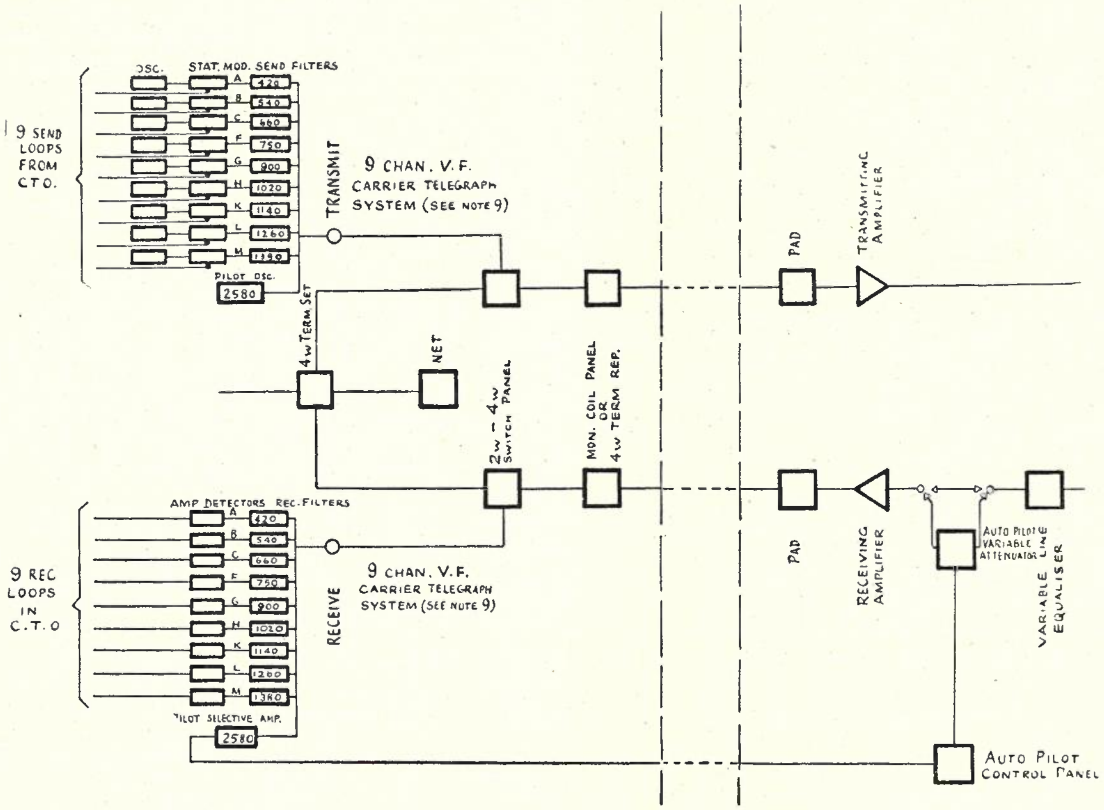

Fig. 3.—Automatic Level Control, Block Schematic.

If the line attenuation falls, the 209FA relay will move to the high contact. The moment the tongue touches the contact a slight positive potential is applied to the grid of the gas tube V2. The gas in the tube will ionize and plate current will flow and will continue flowing even if the tongue of the 209 relay should break again. Relay B will operate. Contact B1 will open a circuit to relay CS which will release slowly. Contact CS1 will open and relay C will release. A circuit will then be closed via A1, B1, C1, bank No. 3, to the drive magnet DM1. The uniselector will take one step in such a direction as to cut in an additional 0.5 db.

The interrupter contact DM1 will break the plate circuit of the gas tube and relay B will release. The release of relay B will open the drive magnet circuit of DM1. If the level has now been restored to normal the 209FA relay would be floating neutral again and the gas tube would restore to normal on the opening of DM1 since the grid has been restored to the original value which is below the striking voltage, as soon as the 209 relay breaks its contact.

If the level is still high, however, the switch will continue driving with the self-interrupting circuit described until sufficient attenuation is cut in to restore the 209 relay to normal.

Should the switch reach the extremity of the bank and the level still be high, the drive circuit is cut on the 25th contact of bank No. 3. On bank No. 2 a circuit is closed on the 25th contact which operates relay D. Relay D breaks the plate circuit of the gas tube and rings the alarm bell to attract attention.

Should the level drop, the 209 relay will make contact on the low side and the gas tube V1 will flash. This will operate relay A which will cause the release of CS and C in turn and will close a circuit for drive magnet 2 which will step the switch round in the direction to cut out attenuation. The switch will continue stepping until the level is restored to normal or until it reaches the No. 1 contact where all of the attenuator is cut out of circuit. At this point the drive circuit will be broken on the 25th contact of bank No. 4 and relay E will operate via the 25th contact of bank No. 2. The alarm bell will again ring.

Should the line fail completely relay H will release at the same time as the 209FA relay makes contact on the low side. The contact of H opens the cathode circuit of the gas tubes and lights the alarm lamp and causes operation of relay F which operates the alarm bell. The

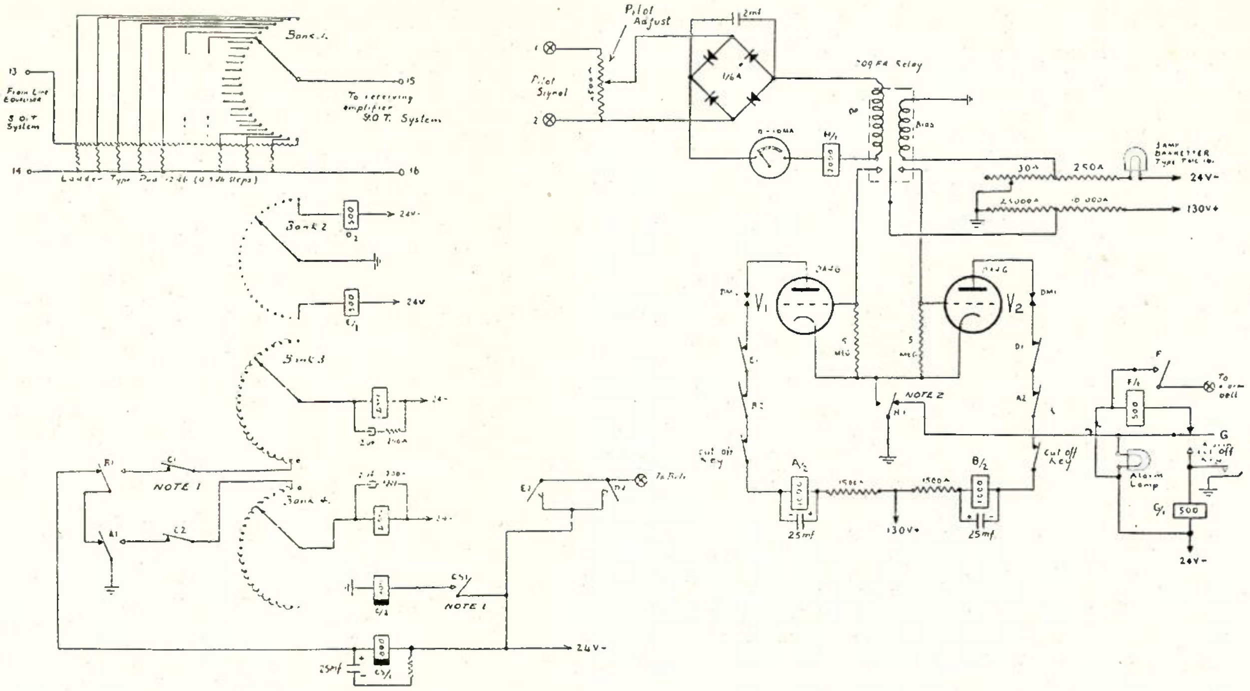

Notes:—(1) Relays CS and C are normally operated. (2) Relay H is normally operated.

Fig. 4.—Schematic Circuit of Control Panel.

mechanic answering the alarm presses the non-locking alarm cut-off key which operates relay G. Relay G locks up to the contact of H so long as the fault condition persists and it releases relay F and stops the bell ringing. The alarm lamp, however, remains alight. As soon as the fault condition disappears relay H operates again. This unlocks relay G and extinguishes the alarm lamp. It restores the operating circuit of the gas tubes ready for normal operating conditions again.

References

The Story of the 2B Regulator.—Bell Laboratories Record, May, 1939.

An Improved Three Channel Carrier Telephone System.—Bell System Technical Journal, January, 1939.

A Pilot Channel Regulator for the K1 Carrier System.—Bell Laboratories Record, June, 1942.

A Twelve Channel Carrier Telephone System for Open Wire Lines.—Bell System Technical Journal, January, 1939.

PAYMENT OF SUBSCRIPTIONS

Subscribers are requested, when forwarding remittances by post, to address them to—

The Postal Electrical Society of Victoria,
Box 4050, G.P.O.,
Melbourne, C.1.

Money Orders, Cheques and Postal Notes should be made payable to—

"The Postal Electrical Society of Victoria,"
not to the Telecommunication Journal of Australia.

TRANSMISSION MEASUREMENTS TO 150 KILOCYCLES PER SECOND

J. D. Uffindell

PART 1—EQUIPMENT

Over a long period, transmission measurements have been concerned with a frequency range having as upper limit the 30 KC/sec. of the 3-channel carrier systems, the only extension of this limit being the relatively small rise to 42 KC/sec. following the installation of carrier programme channels. With the introduction into Australia of the "J" type 12-channel carrier system, the wide frequency band required lifted the upper limit to the relatively high figure of 150 KC/sec. This frequency range extends beyond the modest 50 KC/sec. for which transmission testing equipment in common use was designed and, in consequence, for the greater part of the testing undertaken as a preliminary to the installation of the first "J" system, new equipment specifically designed for high frequency use had to be obtained and new methods adopted.

This article will describe testing procedure based upon equipment available, and which experience has shown to be satisfactory for the frequency band bounded by 150 KC/sec.

Early methods, whereby it was attempted to adopt the then existing carrier frequency testing gear for use to 150 KC/sec., will not be touched upon, except to state that in the main results were unsatisfactory, chiefly on account of the inadequacy of input circuits in the matter of impedance and more particularly in respect to lack of the high degree of balance to ground, necessary to restrict longitudinal effects.

The available testing equipment, either specifically designed for 150 KC/sec. operation, or suitable for such operation is described briefly. Detailed description within the space available cannot be attempted, but points of interest in design bearing upon important features in performance will receive attention in more detail. Apart from delineation of the transmission test procedures for such measurements as are more commonly met with, one or two cases will be described where tests of a rather more specialised nature have been carried out, as indicating the manner in which improvisation has made possible satisfactory results not obtainable with more standardised methods.

APPARATUS

17B Oscillator

A source of frequency covering the range to 150 KC/sec. has been provided by Western Electric in the 17B oscillator. This oscillator is a development of the Bell Laboratories, and represents a departure from the commonly used resistance stabilized carrier frequency oscillator. It is of the beat-frequency or heterodyne type and, with careful design, qualities latent in this type have been developed to an exceptional degree. In consequence, it has certain desirable attributes not possessed by earlier types; notably, a substantially flat output-frequency characteristic, and a single frequency control covering the whole range.

Performance Data: The frequency range of the 17B is 50 cycles to 150 KC/sec. indicated on a film scale some 25 feet in length and calibrated at 50 cycle intervals. The scale accuracy is within ± 25 cycles at any point, and the long-time frequency stability is within ± 20 cycles for any particular setting.

Of considerable practical value from the viewpoint of testing technique, is the exceptional output-frequency characteristic which for representative oscillators is close to ± 0.2 db for the range 3-150 KC/sec., independent of the output level (Fig. 4). The output stability is of the order ± 0.5 db for a given output setting over long periods, provided the power supply voltage is stable to within ± 10 volts. The output is adjustable in steps of less than 0.1 db from approximately 1 milliwatt to 1000 milliwatts, or from zero to + 30 db referred to 1 mW. The output control is roughly calibrated in 1 db steps above the minimum of 1 mW.

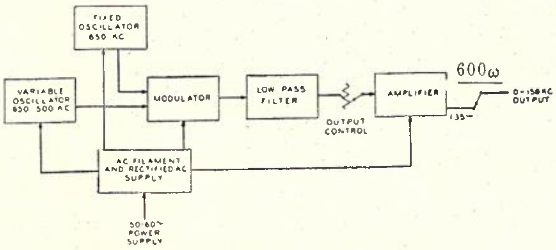

Fig. 1.—17B Oscillator—Block Schematic.

The principle circuit features are as shown in Fig. 1. Two oscillators of high stability are incorporated, the first fixed at a frequency of about 650 KC/sec. and the second variable between 650-500 KC/sec. The outputs are fed to a balanced vacuum tube modulator and then to a low-pass filter. The filter passes the difference frequency, but suppresses the fundamental component frequencies along with the higher order modulation products. The filter output passes via an output control to the main push-pull amplifier, appearing at the output jacks through an output transformer. The transformer provides output impedances of 600 ohms or 135 ohms, selected by a key. The variation in frequency of the variable oscillator from 650 KC/sec. to 500 KC/sec., which provides the output frequencies from 0-150 KC/sec., is only some 20% of the maximum frequency of 650 KC/sec.

Frequency variation over such a narrow band as this satisfies requirements for enabling a single coil and variable condenser to be used and makes possible a substantially flat output-frequency characteristic. This is distinct from the single tube oscillator which would require a number of coils to cover the range to 150 KC/sec. along with the necessity for wide variation in tuning condenser capacity. Considerable change in output for differing frequencies is inherent under such conditions.

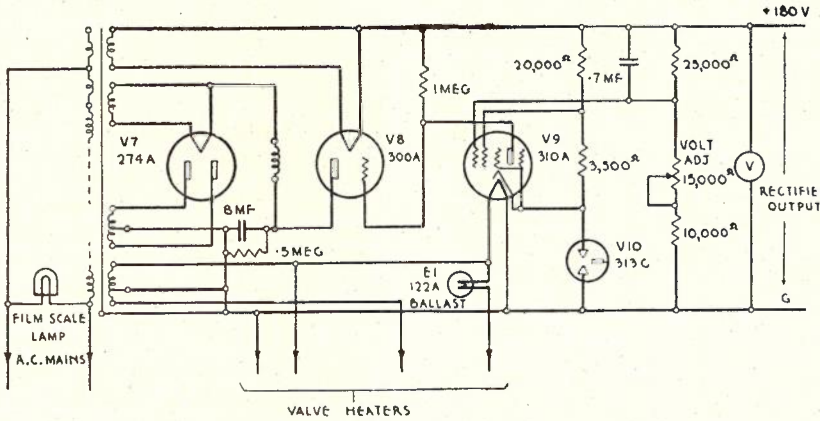

Fig. 2.—17B Oscillator: Stabilised Power Supply.

Heater and anode supply currents are provided through the medium of an A.C. power supply unit (Fig. 2). Particular attention has been paid to regulation of the anode voltage to obtain output stability of a high order. For this purpose, two vacuum tubes are used. The anode-cathode path of a triode V.8 is in series with the positive lead from the ripple filter and acts as a variable impedance under the control of a pentode tube V.9. The pentode control tube is included in the circuit in such a manner that variations in the anode supply voltage cause change in both its screen and control grid potentials; in turn, the control tube functions to vary the negative bias on the grid of the triode, causing the anode-cathode impedance to vary in such a way as to offset the voltage change initiating the operation. In addition to this regulating function, the circuit operates with sufficient rapidity to act against the rectifier ripple and so contribute to the smoothing of the D.C. output.

Calibration: Facilities for calibrating the oscillator are provided. The two frequency points selected are 50 cycles (power supply frequency) and 100 KC/sec.

To satisfy the 50 cycle requirement, the fixed frequency oscillator only, is adjusted by a trimmer condenser to bring about a frequency 50 cycles higher than that of the variable oscillator. At 100 KC/sec. the tuning condenser capacity of both the fixed and variable oscillators is changed by identical amounts, but since the variable oscillator tuning capacity is greater at 100 KC/sec. on account of its lower frequency, the relative change for the two oscillators will be different and consequently the difference or output frequency will be varied. At 50 cycles the adjustment effected at the 100 KC/sec. point will have no effect since the capacity of both condensers was changed by an identical amount at that point.

The 50 cycle calibration is brought about by beating the oscillator output against the 50 cycle power supply frequency which is generally held within close limits. The film scale is set to 50 cycles and a small current from the 50 cycle power supply is fed in series with the oscillator output to the calibrating lamp (see Fig. 3). The lamp will then vary in brightness at a rate equal to the difference between the oscillator output and power supply frequencies. A screw-driver adjustment is provided to bring about the change in the oscillator frequency in the manner indicated above. Synchronism between the power supply and oscillator output can occur for two distinct adjustments to the fixed oscillator frequency—when it is set above and when it is set below the variable oscillator frequency by the amount of the power supply frequency. In the latter case an error of 100 cycles in the dial reading would result. Consequently, it is necessary to check the calibration at points both 50

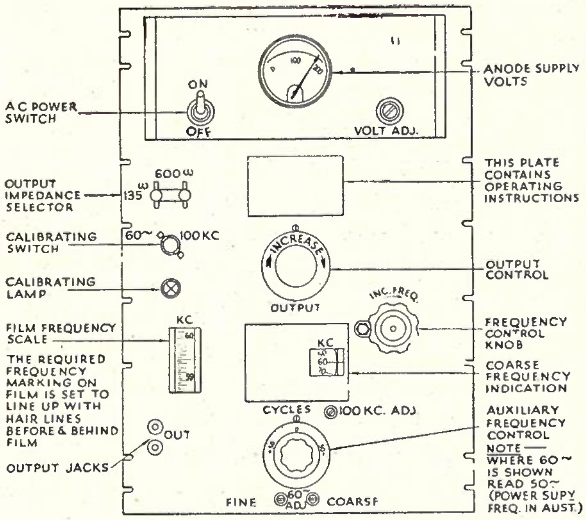

Fig. 3.—17B Oscillator, Front Panel.

cycles above and 50 cycles below the point of zero frequency on the film scale to ensure that the calibration has been made on the correct (difference) side-band.

The 100 KC/sec. point is checked against the resonant frequency of a crystal. A mark appears on the film scale of each oscillator at the measured resonant frequency of the individual crystal; this is at or close to 100 KC/sec. With the film scale set to this mark, the calibrating key is operated to connect the crystal across the grids of the amplifying stage and the calibrating lamp across the oscillator output. The oscillator frequency is then varied with the screw-driver control provided until the lamp is extinguished. This indicates that the oscillator frequency and the resonant frequency of the crystal are identical; the crystal at resonance behaving as a low impedance shunt reduces the oscillator output sufficiently for the calibrating lamp to be extinguished.

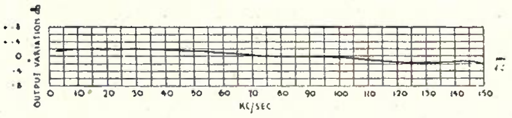

Fig. 4.—17B Oscillator: Output-Frequency Characteristic.

Calibration procedure is set out on an etched plate fixed to the front panel of the oscillator, although reference is lacking to the necessary precaution relating to the 50 cycle calibration mentioned. Where 60 cycles is referred to on this plate read 50 cycles or the power supply frequency.

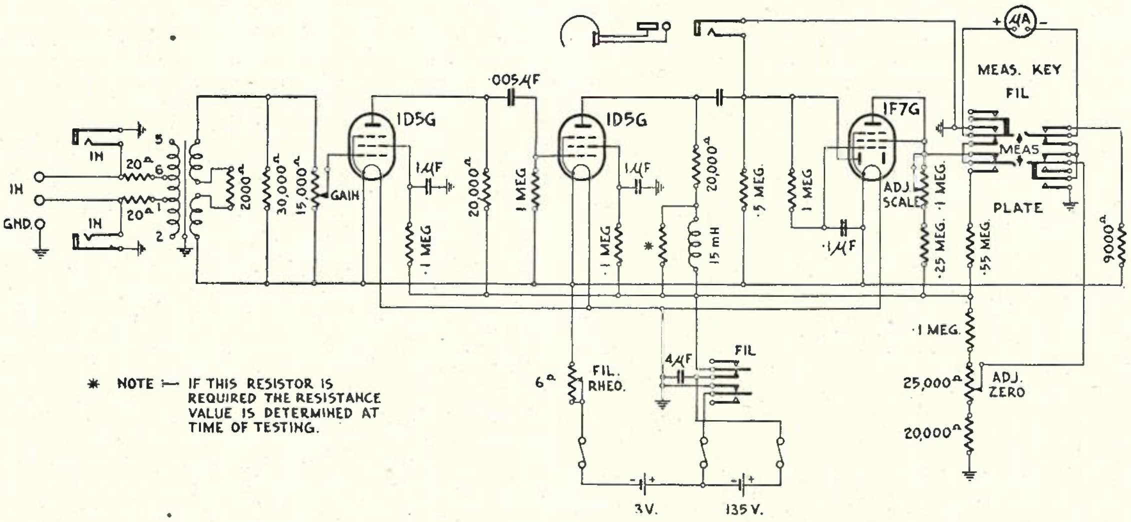

Fig. 5.—2A Amplifier—Detector Circuit Schematic.

Battery Operation: Where a 17B oscillator is to be used for field testing, it is advantageous to add facilities enabling battery operation. While the nominal anode voltage is given as 180 volts, the makers mention that satisfactory operation is possible between 150-200 volts, with decreased or increased power output. Extending the limits further, it has been found that with the anode voltage supplied by a 135 volt battery a power output of + 24.5 db above 1 mW is possible, compared with + 30 db at 180 volts. The difference in the measured harmonic percentages for the two conditions is inappreciable and the output impedance is unaffected. The value of this low voltage battery operation lies in the drop in current consumption from 100 m.A to 72 m.A.

Operation: Power switch is set to ON. The anode voltage meter will go off scale for some 30 seconds until the tube cathodes heat up. The anode voltage can then be screw-driver adjusted to the red 180 volt mark on the meter. For maximum stability 30 minutes should elapse before carrying out the scale calibration. Before using, the relevant key should be operated to select the required 600 ohm or 135 ohm impedance. To obtain any desired frequency, the frequency control knob is rotated when the approximate frequency will be indicated on the coarse indicator and the exact frequency on the film scale. For accurately locating the film scale, the required marking should be lined up with hair lines engraved on the front glass of the film opening and on the opal glass at the rear of the film.

Amplifier Detectors

Amplifier detectors suitable for use to 150 KC/sec. and at present in use are the Western Electric 2A, the S.T.C. 3A, and the Siemens type B.3.

Western Electric 2A (Fig. 5): A gain-frequency characteristic flat to within very close limits, is attained. This feature, combined with the flat output-frequency characteristics of the 17B oscillator, facilitates certain measurements and the speed with which they can be carried out. From the viewpoint of open wire measurements, it suffers the disadvantage of being untuned. Portability is considerably benefited by the inclusion of self-contained anode and filament batteries.

Voltage amplification is provided by a two stage amplifier feeding a diode rectifier with the tube of a vacuum tube voltmeter across the load resistance. The indicating meter in the plate circuit of this tube is calibrated to read in decibels. The scale is large and open and calibrating facilities are provided. The uniform Gain-Frequency characteristic is based upon two resistance-capacity coupled pentode stages in which the circuit constants have been proportioned in such a manner as to achieve the desired uniformity as distinct from maximum gain and voltage output.

Reference to Fig. 6 and the following paragraph will serve to indicate design considerations bearing upon such an extended frequency response.

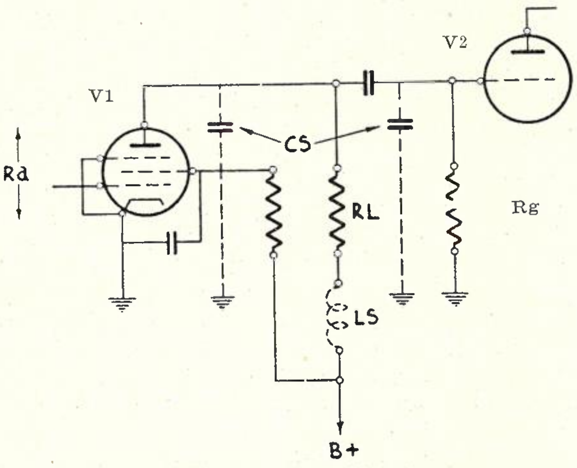

Fig. 6.—Pentode Amplifier Stage.

Cs = distributed shunt capacities paralleling the tube plate circuit (plate-cathode capacity of V1, grid-cathode capacity of V2 and stray capacities to ground of circuit constants and wiring).

Rq = the impedances RL, Ra and Rg all in parallel

where RL is plate coupling resistance,
Ra is plate impedance of tube,
Rg is grid resistor of following stage.

Neglecting the effect of the shunt capacities, the stage gain for a pentode tube becomes:

Gain = Gm Rq. (Gm = Mutual Conductance.)

However, with increasing frequency the reactance of the shunt capacities Cs will decrease to a point where it becomes comparable with Rq; from that point the gain will progressively fall. The frequency at which this shunting effect becomes appreciable can be raised by reducing the value of RL and consequently Rq. As indicated, the stage gain is directly proportional to Rq and the reduction in gain sets a limit to the amount by which RL can be reduced for a tube of given mutual conductance. To obviate the necessity for undue reduction in the value of RL and loss of gain, a form of compensation can be applied to the circuit in the form of an inductance Ls of suitable value in series with RL. The reactance of this inductance increases with frequency, adding to RL and effectively off-setting the reduction brought about by the distributed shunt capacities. This expedient has been adopted in the case of the 2A amplifier detector.

The rectifier-vacuum tube voltmeter section is so designed as to provide a rectified output that varies in logarithmic fashion, giving an approach to a linear decibel scale on the indicating meter. Another feature of considerable practical value is the current limiting action of the vacuum tube voltmeter circuit that provides extreme compression of the meter range near to maximum deflection so that irrespective of input to the amplifier, the meter needle cannot go off scale.

Calibration: This is achieved through the adjustment of two screw-driver operated screws marked ADJ. ZERO and ADJ. SCALE. Pull out FIL switch. Operate meter key to "Fil," adjust FIL RHEO until meter reads to red line. Operate meter key to "Plate," meter should read above red line or anode batteries be replaced.

The output from a 17B oscillator is connected to the 2A through an attenuator, the oscillator output and attenuator impedances being related to the selected input impedance of the 2A. The loss in the attenuator is adjusted so that values of 2 db and 10 db can conveniently be extracted. The oscillator output, and/or the 2A gain control, is adjusted for a reading of — 2 db on the 2A meter scale. The attenuator loss is then reduced by 2 db and if the calibration is correct the meter will read zero. If the reading is above zero the ADJ. ZERO screw is adjusted to bring the needle still more above zero. The 2 db is restored to the attenuator and the oscillator output (and/or 2A gain control) again adjusted for a — 2 db reading. This process is repeated until the meter correctly reads zero for a reduction in pad loss of 2 db. If the meter reads below zero, the adjustment to the ADJ. ZERO screw is such as to make the reading still more below zero, successively repeating the process if necessary as above.

Calibration is next obtained over the scale from — 2 db to + 8 db. The meter is again adjusted to — 2 db and the attenuator loss reduced by 10 db. The meter should read + 8 db. If not, the ADJ. SCALE screw is varied to correct the error. This will affect the zero adjustment which should be rechecked. Experience has indicated that compromise is necessary between the two adjustments.

When replacing the 1F7G tube it is generally necessary to make a selection from a number of tubes before satisfactory calibration of the meter is possible.

Sensitivity is such that an input of approximately 53 db below 1 mW will cause the indicating meter to read zero on the scale with the gain control (uncalibrated) set to maximum. The gain will vary somewhat with different tubes. Typical Gain-Frequency and Impedance-Frequency Curves are shown in Fig. 7. This sensitivity holds with frequency from 5-150 KC/sec. within limits of ± 0.25 db, provided the filament voltage is adjusted to the correct value and the anode voltage is maintained above an indicated minimum. Provision is made for the indicating meter to function as a voltmeter across the filament and anode batteries.

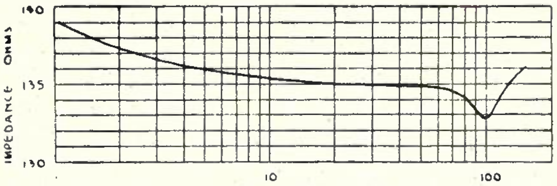

Fig. 7.—2A Amplifier-Detector: Impedance-Frequency Characteristic.

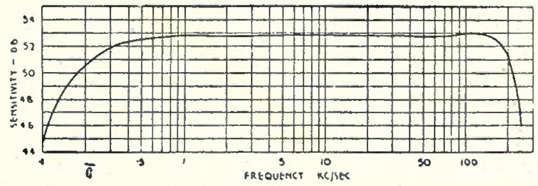

Fig. 7A.—2A Amplifier-Detector: Gain-Frequency Characteristic.

Input Impedance: The 2A has been designed with operation on 135 ohm circuits as the prime consideration, although the input transformer also provides a 600 ohm input impedance. The 135 ohm input is maintained to within some ± 2 ohms from 5-150 KC/sec., giving a reflection coefficient of better than 1%. The nominal 600 ohms input impedance, on the other hand, for the particular instrument tested is nowhere better than 490 ohms, the worst value being 403 ohms at 100 KC/sec., the reflection coefficient in this case being 20%. This figure can be considerably improved by the addition of suitable series resistance. To change from 135 ohms to 600 ohms input impedance, the leads connected to the tappings (terminals 1-6) of the input transformer primary are unsoldered and connected to the extreme ends of the winding (terminals 2-5). (Early instructions are in error in this respect.)

Balance to ground of the input transformer is not given, but appears to be adequate for most conditions.

As stated above, a reading of zero on the meter scale is obtained for an input of —53 db. The calibration extends downwards to —4 below zero, at which point the needle falls off scale. The needle can be kept above the bottom end of the scale for a considerably lower input by adjustment of the "adjust zero" screw, but at the expense of a much reduced movement for a given change in signal.

Care is necessary when replacing anode batteries. Clearance between the battery terminals is small and trouble has been experienced through terminals of the Fahnstock clip type framing. With the battery switch in the "off" position, this puts the framing anode voltage in series with the filament battery across the valve filaments, to the detriment of the latter. The possibility of damage to the valves can be overcome by permanently wiring the common point of the anode-filament batteries to ground (this is normally opened with the switch in the "off" position).

S.T.C. 3A Detector Amplifier (Fig. 8).—The 3A provides an input circuit having either a flat or a highly selective characteristic as required. In both cases the indication is visual, although headphones can be used for the audio-range.

As a selective amplifier the input is continuously tunable over the range 750 cycles to 350 KC/sec. The range is covered with five switched tuning coils tuned by fixed decade condensers in conjunction with a variable condenser. The amplifier consists of three resistance-capacity coupled stages feeding a balanced vacuum tube detector and a D.C. indicating meter. The selective circuit can be switched into circuit between the secondary of the input transformer and the first amplifier tube.

The manner in which the amplifier gain is maintained over such an extended frequency range in comparison with the W.E. 2A is of interest. Choice of tubes for the 2A necessarily is limited in view of 2.0 V battery operation for the filaments, and tubes of comparatively low mutual conductance are used. This means that if adequate gain is to be provided the plate load resistances cannot be reduced unduly. Plate load resistances of 20,000 ohms are used with the addition of reactive components in the plate circuits to maintain the gain at the higher frequencies. In the case of the 3A recourse is had to 6 volt tubes, enabling the selection of tubes of high mutual conductance. In conjunction with the provision of a third stage, this has made possible the use of plate load resistances of only 10,000 ohms and 5,000 ohms, which are sufficiently low to be unaffected by the distributed shunt capacities to a frequency considerably above 150 KC/sec.; consequently, the required uniformity of gain is obtained and the added stage provides gain greater than that of the 2A.

The detector is in the form of a bridge as shown in Fig. 9. Two similar triode tubes function as two equal arms of the bridge and two resistances as the remaining two arms. The indicating meter is connected across the valve plates and reads zero when the bridge is accurately balanced by adjustment of the resistance arms. One tube functions as a balance only,

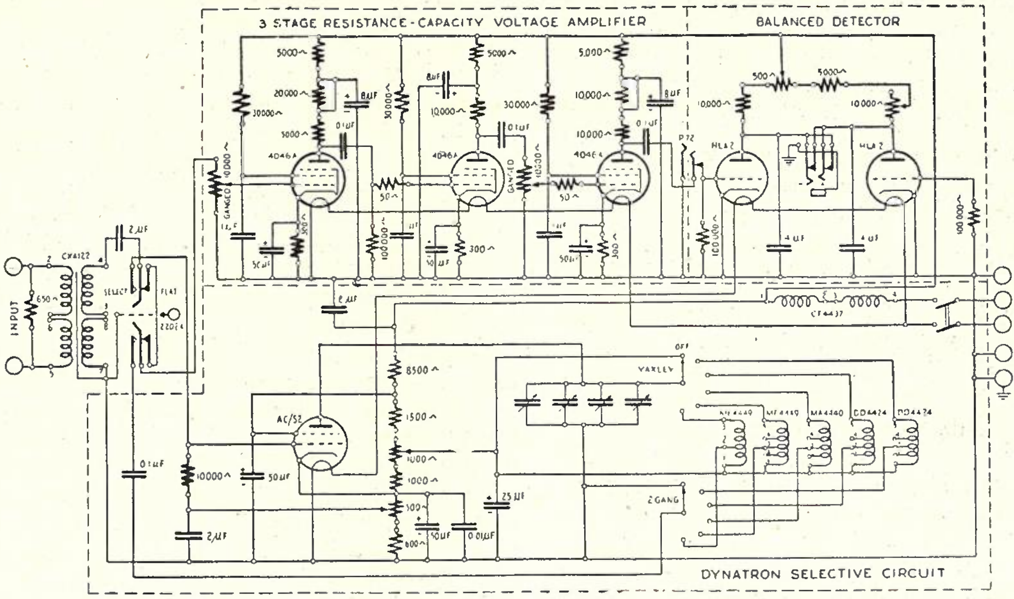

Fig. 8.—S.T.C. 3A Amplifier-Detector: Circuit Schematic.

and has its grid connected to ground. The second tube functions as a grid detector, rectifying the amplified signal. This rectification brings about a change in plate current which upsets the bridge balance and causes a deflection of the indicating meter. There is no effect as in the 2A to limit the meter needle swing and the very high gain of the amplifier requires considerable care if the meter needle is to escape damage.

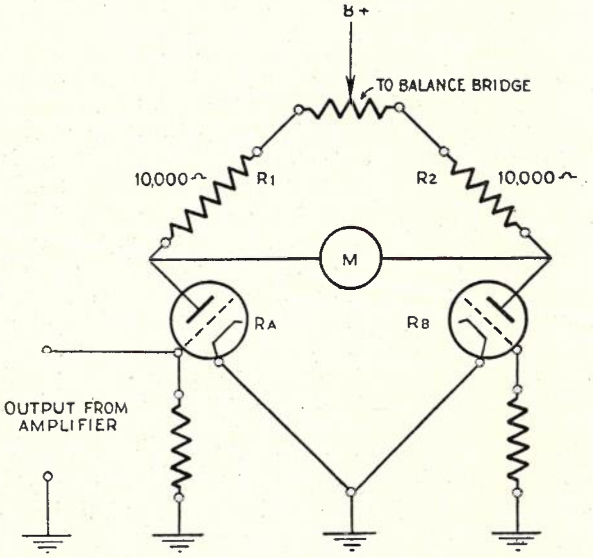

Fig. 9.—3A Amplifier-Detector: Schematic Circuit of Bridge Type Detector.

The selective circuit operates on the dynatron principle and while rather critical of adjustment, provides selectivity of a high order. The operation of the circuit depends upon the negative anode resistance characteristic of a screen grid valve operating with anode voltage lower than the screen voltage. With a resonant circuit connected into such an anode circuit, the decrement of the resonant circuit can be reduced with marked increase in selectivity. In the 3A detector amplifier, the negative anode resistance of the tube and, consequently the selectivity, can be controlled by varying the grid bias. Maximum selectivity is obtained where the equivalent series resistance of the negative anode resistance is equal to the effective series resistance of the resonant circuit at the resonant frequency. This condition satisfies the requirements for oscillation to commence, so that for maximum stable selectivity it is necessary that the "Selectivity Control" be carefully adjusted to bring the circuit to oscillation, and then brought back to a point just below that at which oscillation ceases.

Sensitivity.—In the selective condition the sensitivity is dependent upon care in the adjustment of the "Selectivity Control." It is given by the makers as mid-scale meter deflection for an input 110 db below 1 mW. Used with an untuned input, the sensitivity is some 80 db. This is considerably higher than that of the 2A.

The gain-frequency characteristic in the untuned condition falls by approximately 2 db from 1 KC/sec. to 150 KC/sec.

The battery requirements are:—Filaments: 12 volts 2 amps. Anode Supply: 135 volts 35 m/a. A decoupling filter is built into the anode supply circuit.

Siemens Type B.3 Amplifier Detector. — Designed for use within the frequency range 200 cycles to 100 KC/sec., the B.3 amplifier detector can be switched to function in a number of ways.

(1) As a straight amplifier employing one or two stages of gain, in the first case with the

input connected directly to the grid of the first tube and, in the second, through a high impedance input transformer. The frequency range covered is 200 cycles — 100 KC/sec. in both instances.

(2) A two stage tuned amplifier with a range of 200 cycles to 2 KC/sec. with high impedance transformer input.

(3) A 2-stage heterodyne amplifier covering the frequency range 2-100 KC/sec., also with high impedance transformer input.

Operation is by battery requiring 2 amps at 12 volts and some 20 M/a. at 200 volts.

Impedance Bridges

Both Western Electric and Standard Telephones & Cables parallel equivalent type Impedance Bridges are in use for measurements to 150 KC/sec. Comparison between the parallel and series type bridges for high frequency use indicate several points of preference in favour of the former, particularly in respect to the effects of distributed capacities which increase with frequency.

The series connection of the R and C components is inherently objectionable in this respect. Equalization of distributed capacities to ground about the ends of each set of components is ineffective in reducing the adverse effects of such capacities, since the point of connection takes up some intermediate — and variable — potential with respect to the equal and opposite potentials at either end. Equal distributed capacities under this circumstance produce unequal effects.

Further benefits derive from the parallel connection. It is possible to balance out the residual capacity of the C components with a trimming condenser across the opposite side of the bridge. Where the equivalent C value for the series bridge runs to greater than 10 μF, and cannot be read, the parallel equivalent is a very small but readable value.

At the higher frequencies where the series equivalent value tends to become very small and subject to error, the parallel equivalent takes a more suitable value.

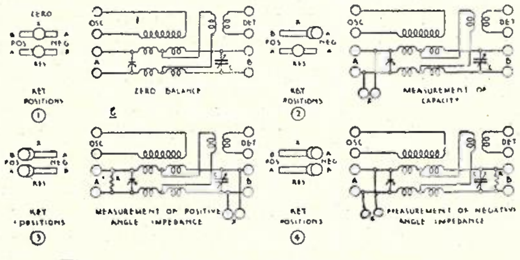

Fig. 10.—S.T.C. 5A Bridge: Schematic.

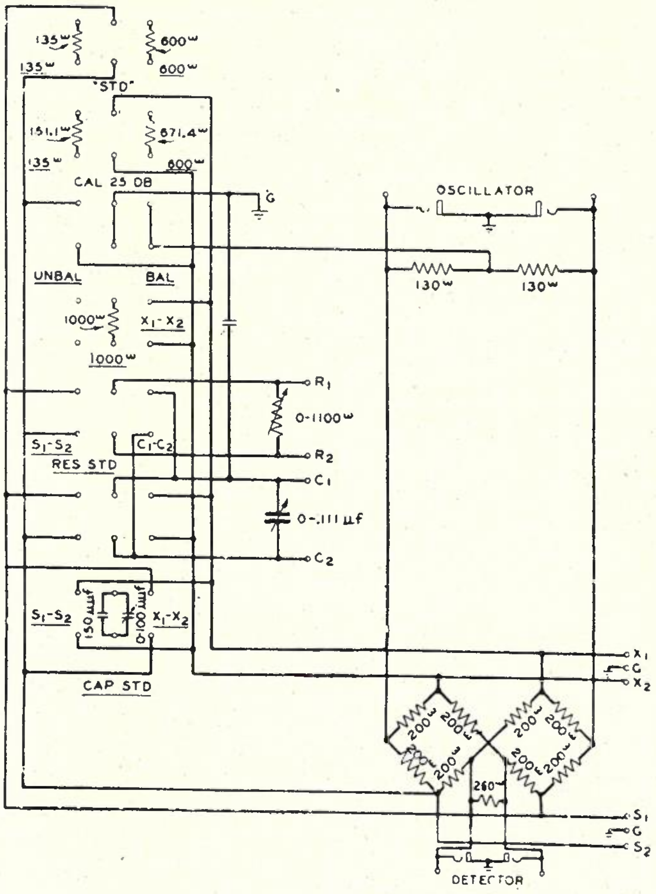

Fig. 11.—W.E. 5A Impedance Bridge: Schematic Circuit.

S.T.C. 5A Bridge. — This bridge is of the balanced hybrid-coil type and has R and C components reading to 11,111 ohms (minimum steps of 0.1 ohm) and 1.111 μF (minimum steps given by an air condenser calibrated in $\mu\mu$F x 10) respectively. The components are double-screened, and the hybrid coil exhibits a high degree of balance to ground in respect both of the ratio arms and the "Unknown" terminals. The capacity standards are wired permanently on one side of the hybrid coil, the residual capacity being balanced out with a trimming condenser on the opposite side (see Fig. 10). The "unknown" impedance and the resistance standards are inter-changed about the two sides of the hybrid for change of sign in the reactive component by operation of the two keys marked X and RES respectively. This bridge is not affected to the same extent as the W.E. 5A by longitudinal currents in the circuit measured, and the greater capacity enables it to be used to lower frequencies.

W.E. 5A Bridge (Fig. 11).—This bridge is designed for the measurement both of Impedance and Return Loss. It differs from the S.T.C. bridge in being of the resistance ratio arm type, as distinct from the more common hybrid coil arrangement. The ratio arms consist of four pairs of equal resistances with the "known" and "unknown" impedances connected between the mid-points of the opposite pairs.

One decade only and a slide wire take care of the restricted R range of 1,100 ohms. This value can be effectively extended by the expedient of switching a 1,000 ohm resistance in shunt across the "unknown" terminals. The C range is also rather restricted, having a maximum capacity of 0.111 μF contained in two decades and an air condenser. Each operation of the CAP. STD. key places a small variable balancing condenser across the side of the bridge opposite to that occupied by the capacity standards. Operation of an UNBAL.-BAL. key provides either unbalanced or balanced operating conditions.

For measurement of negative angle impedance both the resistance and capacity standards are connected to the S_1-S_2 ("known") side of the bridge by operating the RES. STD. and CAP. STD. keys to the S_1-S_2 position. The RES. STD. key remains at S_1-S_2 for positive angle measurement but the CAP. STD. keys are set to X_1-X_2 (connecting to the "unknown" side of the bridge). This causes some change in zero balance conditions and requires that separate zero balancing be carried out for change of sign in the measured impedance.

The manufacturers claim that the inherent balance to ground is such that no input transformer is needed where measurements are made on such lines as are normally encountered, reliance being placed on the output transformer of the 17B, and the 2A input transformer providing satisfactory balance. The bridge is extremely compact and light in weight.

30A Transmission Measuring Set (Fig. 12).—The 30A set is a portable and specialized version of the familiar "Test and Adjust" circuit of the carrier bay used for the measurement of gain and loss. It has been developed primarily for use with "J" (open wire) and the "K" (cable) type carrier equipment, and on that account all the incorporated circuits are of 135 ohms impedance. For measurements on 600 ohm circuits, two screened and balanced transformers are included, having good frequency characteristics to 150 KC/sec. although the loss-frequency characteristics (Fig. 13) are such as to require correction with frequency for the gain or loss measurements concerned.

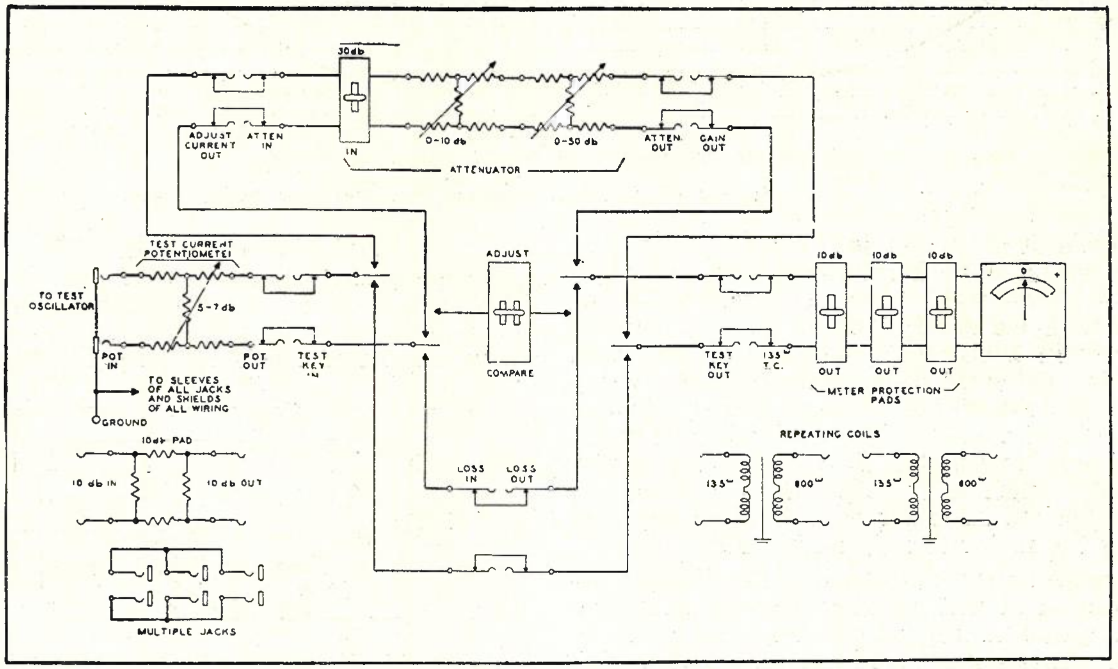

Fig. 12.—30A Transmission Measuring Set—Schematic Circuit.

The attenuators in the set enable gain measurements of about 90 db to be made, though with certain limitations it is possible to extend the measurement range to 120 db.

Loss measurement is limited for each case by the maximum permissible input to the circuit under test, but by recourse to the 2A amplifier detector in place of the thermocouple meter, losses of considerable magnitude can be measured. It consists basically of an input and output measuring circuit, separated by a comparison circuit consisting of two separate paths selected by a four pole double-throw "Test-compare" key. The input circuit consists of jacks for connection to the source of test current, and a finely graded potentiometer for adjustment of the current. The output circuit consists of a thermocouple measuring circuit with inbuilt facilities for calibration, and preceded for protection by three 10 db pads. These are progressively removed from the circuit by separate non-locking keys. A variable attenuator is included in one of the two comparison paths. Jacks have been interposed through the circuit at points necessary for flexibility.

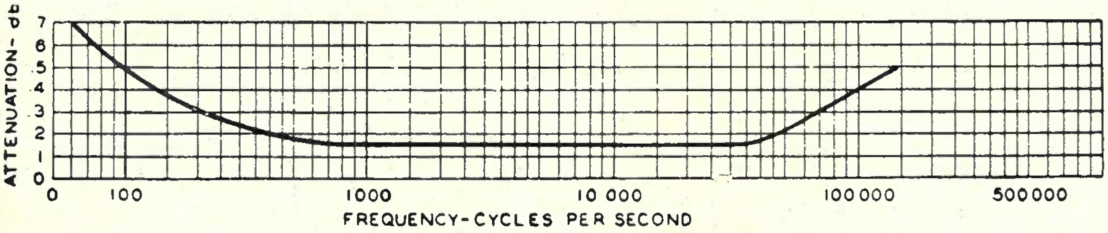

Fig. 13.—Loss Frequency Characteristics of 600-135 Ohm Matching Transformers.

The scale of the meter is calibrated directly in decibels referred to 1 milliwatt, and extending from —10 db to +3.4 db with zero at about mid-scale. Scale accuracy is at its best between the limits ± 1 db either side of zero and each decibel is subdivided in 0.1 steps, making it possible to accurately follow small increments and decrements of current. Calibration of the measuring circuit is simple. The calibrating switch is moved to each of three positions in turn, and the appropriate knob for each position adjusted to bring the meter to zero on the scale.

Siemens Admittance Unbalance Set (Fig. 14).—The function of this set is to provide an indication in terms of capacity and leakance of the unbalance existing between two cable pairs. The relevant measurements are usually made at 60 KC/sec. and provide the information necessary to the preliminary adjustment of the networks used for crosstalk neutralization in carrier cables.

There is a similarity in principle to the capacity unbalance set. Each of the four arms consists of a resistance and a capacity in parallel. The components in the case of the "A" and "B" arms are of fixed and equal value, while those of the "C" and "D" arms can be varied about equality by adjustment of the variable resistance R and the differential condenser C. Both R and C carry dials calibrated about a zero point in terms of micromhos and $\mu\mu$Fs. respectively, with positive and negative indications for the two directions of movement. The magnitude and sign of the dial settings at balance indicate the unbalance existing between the two pairs of wires concerned. Adjustments for zero balance are provided by R1 and C1. The unbalance measurable is within the limits ± 220 $\mu\mu$F and ± 10 micromhos. The leakance range can be extended in either the positive or negative direction by inserting one or more of four fixed resistances into either one or other of two sets of clips provided. Each resistance adds 10 micromhos to the dial reading.

Sets of terminals are provided for connection to the pairs of two quads along with two changeover keys enabling either pair of the first quad to disturb either pair of the second quad. A further "test" and "listen" key provides for the connection of a battery and milliammeter to the "disturbed" lines for ready observance of correct termination.

Miscellaneous Equipment

Change-over Keys.—Keys of the double-pole double-throw type have considerable application in transmission testing. At high frequencies and where circuits of considerable level difference are concerned, choice of changeover keys is restricted to types possessing negligible leakage and capacity between the blades, such as the Muirhead 2A or relevant type Yaxley switches.

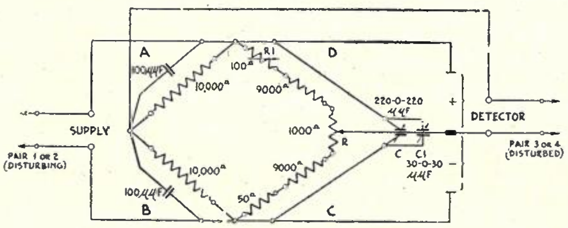

Fig. 14.—Siemens Admittance Unbalance Set: Schematic Circuit.

The keys should be mounted in screened boxes with the terminals adequately spaced in material having leakage value of a high order. Internal wiring should be well spaced or of shielded wire. High and low level circuits should not be switched by the one key unless the loss from one side of the key to the other is known to be adequately in excess of the level difference.

Terminations.—Requirements in the matter of non-inductive resistances are met most easily with suitably mounted resistances of the carbon or composition type.

Attenuators.—Muirhead type 4B attenuators have proved satisfactory for operation to 150 KC/sec., maximum loss is 110 db in 0.5 db steps. Attenuators of the 1A type, extensively used and designed for measurements to 50 KC/sec., lack the degree of balance to ground required for 150 KC/sec. operation and are not satisfactory for this use.

Meters for High Frequency Use. — Thermocouples with attendant Rawson micro-ammeters in common use for carrier frequency measurements are generally satisfactory. Where stable battery operated vacuum-tube voltmeters of suitable characteristics are available, these may be used to advantage.

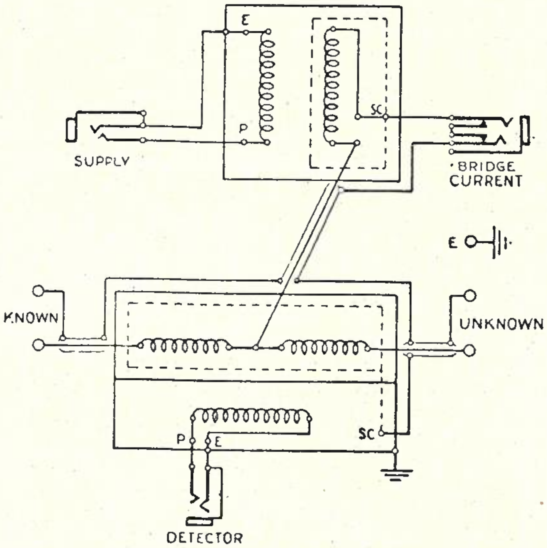

Fig. 15.—Siemens Hybrid Coil: Schematic Circuit.

Weston 669 V.T. voltmeters have been satisfactorily adapted to battery operation, providing adequate stability of operation and freedom from any unbalancing effect on the line to be measured. Hand calibration of the scales of two meters in steps of 0.2 db about a common reference point (+2 as above 1 mW, since it falls at the open end of the meter scale), makes possible measurements of small increment and decrement about a mean curve with considerable accuracy. Since the accuracy of the meter scale requires operation at the same anode voltage as that used for calibration, it was necessary to provide means enabling the use of the indicating meter as a battery voltmeter with provision for adjustment of the anode voltage to a fixed point on the meter scale representing the voltage at calibration.

Siemens Hybrid Coil (Fig. 15).—This is a high quality component possessing certain qualities in exceptional degree. The hybrid is of the unbalanced type with isolating input ("supply") and output ("detector") windings, each connected to ground on one side. Double screening is employed and a very high degree of balance is achieved between the two sides of the differential winding.

Apart from its value as a hybrid coil for use in bridge arrangements necessary to meet specialized conditions, suitable connection enables its use as a highly efficient isolating transformer between balanced to ground and unbalanced circuits.

Editor's Note.—Part 2 of this article will deal with testing procedure using the equipment described.

AN AMERICAN TYPE C.B. P.B.X.

C. Cruttenden

The abnormal demand for telephone facilities created by the war conditions in Australia led to the purchase from America of a number of $\frac{15 + 80}{100}$ C.B. P.B.X. switchboards. The switchboards were manufactured by Stromberg-Carlson to the specifications of the Western Electric Co. of America, and are known as American type No. 550 S.C. The numeral is the Western Electric Co.'s type number and the letters the manufacturers' initials.

The switchboards are of the lamp-signalling non-multiple type and are designed to work on 14-26 volts. As shown by the photograph in Fig. 1 the external appearance is generally similar to that of P.B.X.'s in service in Australia. The circuit, however, differs appreciably from any previously used here and this leads to a difference in operating procedure. Fig. 2 is a rear view of the board with the back panel removed to show the apparatus gate.

A schematic diagram of the extension and exchange line, cord, and telephonist's circuits is shown in Figs. 3, 4 and 5. To conserve space, diagrams of the ringing and night alarm circuits have been omitted, but these follow the usual pattern. The cord circuit is of the non-uniform type, the cords being designated "front" and "rear" and the former must always be used for answering and calling the exchange. This type of cord circuit economises in relays for a given number of facilities. The facilities given by the switchboard circuit are:—

(a) Lamp signalling for exchange and extension calls and for cord circuit supervision.
(b) Audible alarm with key control on exchange and extension call lamps.
(c) Night switching on all cords with any line.
(d) Through dialling with switchhook supervision from extensions.
(e) Telephonist dialling on front cord.
(f) Trapping of follow-on calls in the cord circuit on calls dialled by the telephonist.
(g) Ringing supervision on the front cord on follow-on calls dialled by an extension.
(h) Single supervision on the rear cord on all exchange calls.
(i) Double supervision on extension to extension calls.
(j) Ringing on front and rear cords.

Provision is not made in the switchboard or circuit for tie lines or restricted access extensions.

Circuit Operation

General.—The cord and telephonist's circuits contain relays having similar designation letters. This is the manufacturers' designation, and it has been retained for that reason. Retard coils R in Fig. 4 and Z in Fig. 5 are not designated on the circuit provided with the switchboard, but have been given these letters for easy reference in this article.

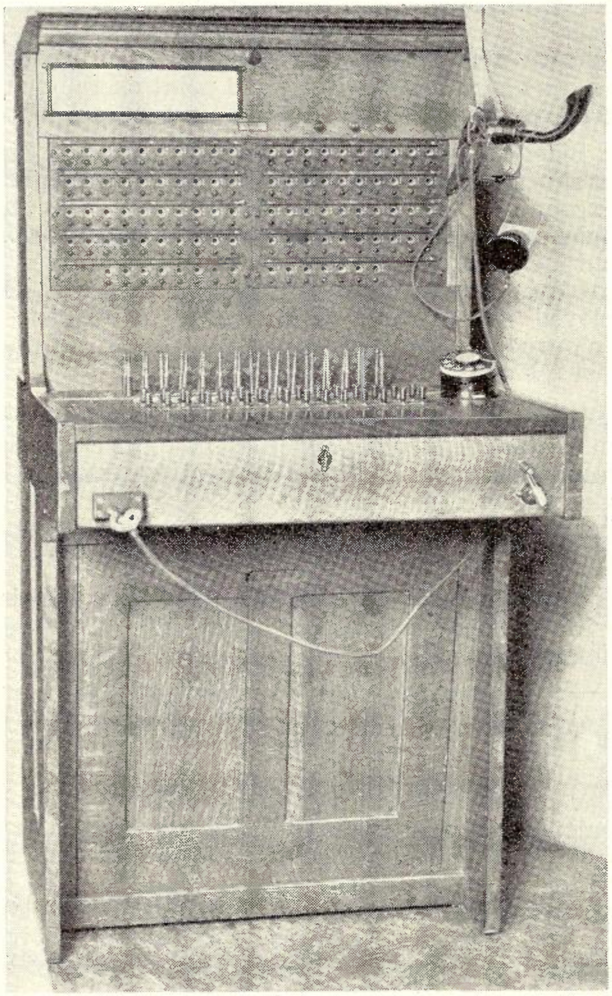

Fig. 1.—Front View of P.B.X.

Completing Local Connections.—When the rear plug is inserted in the calling extension jack, relay A operates from battery and earth via retard coil R and disconnects the rear supervisory lamp. Operation of the speak and dial key KSD connects the telephonist's telephone set across the cord for talking. The springs of key KSD are arranged so that the receiver circuit is closed last and breaks first on operation and release of the key. This prevents clicks in the telephonist's receiver. The wanted extension is called by plugging in the front cord and operating key KRF to ring the extension telephone bell. The front supervisory lamp lights to earth on the sleeve of the rear cord.

When the called extension answers, relay C operates on the loop and extinguishes the front supervisory lamp. Relays A and C provide the double supervision on local calls. Retard R provides transmission battery for both sides of the cord circuit. This is the usual practice for cordless type boards, but the cord type boards in general use in Australia are fitted with separate battery feeds for each side of the cord because this provides a better grade of transmission when long and short extensions are connected together.

Completing Calls to Exchange.—The front plug is inserted in an exchange jack and relay G operates to battery on the sleeve of the jack via resistor YA. Contact unit G1 disconnects battery from the ring side of the cord and operates relay F to earth on the sleeve of the extension jack. G2 opens the front supervisory lamp cir-

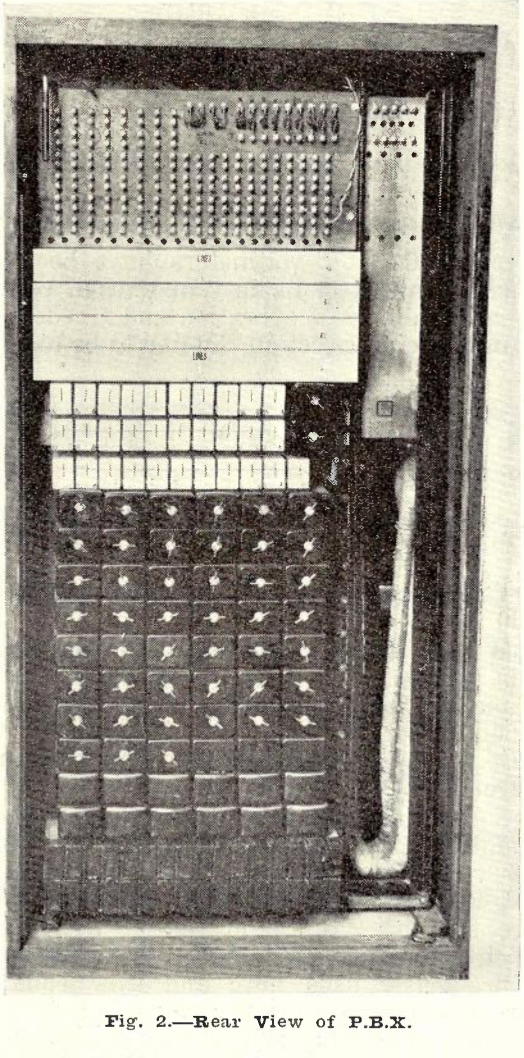

Fig. 2.—Rear View of P.B.X.

cuit. G3 disconnects earth from the tip side of the cord and connects retard R across the tip and ring to trip the ringing on incoming calls. G4 short circuits relay C to improve transmission. The jack springs (Fig. 3) are arranged so that the ring side is not connected through until the tip spring operates. The object of this is to prevent the possibility of a false preliminary pulse being given to line when the plug is inserted in the jack.

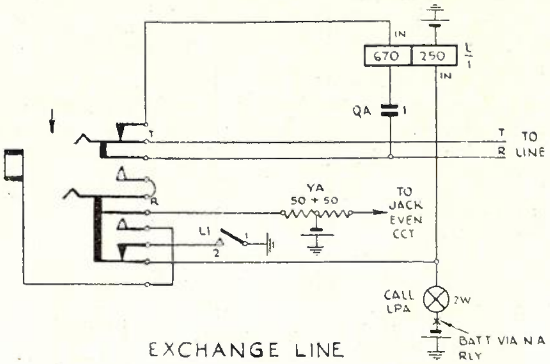

EXCHANGE LINE

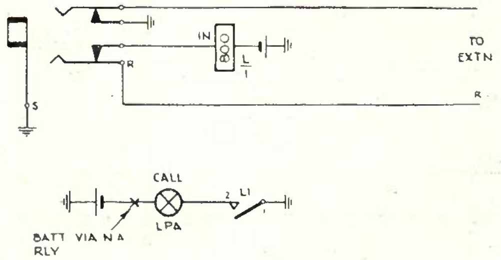

EXTENSION LINE

Fig. 3.—Exchange and Extension Line Circuits.

Relay F operating, short circuits the 36 ohm N.I. winding of relay C to further improve transmission, but relay A remains in circuit for supervisory purposes. F2 disconnects retard R from across the tip and ring. F3 prepares the circuit of relay E and F4 prepares a locking circuit for relay F dependent on the speak and dial key. If non-through supervision is required the locking circuit of relay F may be disconnected.

The circuit is now ready for dialling, the exchange line being looped by the dial and 440 ohm retard coil Z in Fig. 5. When the dial is moved off normal, relay D operates followed by relays C, A and B. Relay D disconnects the telephonist's circuit from the ring of the cord circuit and connects 1000 ohm resistance YA in parallel with retard Z. D2 operates relay C which short circuits retard Z to improve the dialling conditions, C2 disconnects the telephonist's circuit from the dial repeating coil, C3 operates relay A and C4 holds relay D so that it does not commence to release until relay C releases. The turns ratio of the two coils of relay D is not known, but it is probable that the 200 ohm coil gives a higher number of ampere turns in order to improve the release time of the relay. Relay A disconnects the tip and ring of the rear cord from the front cord and connects them to the dial repeating coil and relay B. The latter operates in series with the extension loop on the rear cord and B1 locks relay A independent of relay C.

When the dial returns to normal, relay C releases followed by relay D which is made slow to release in order to hold resistance YA in parallel with retard Z until the line current is built up through the coil. This prevents the possibility of a false impulse occurring at the end of each digit. When the telephonist restores the speak and dial key KSD, relays A and B release and the extension is connected through to the exchange.

When the extension hangs up at the end of the call, the supervisory relay A in the cord circuit (Fig. 4) releases to light the rear supervisory lamp and operate relay E via contact F3 operated. Relay E splits the cord circuit to release the exchange call and prevent the extension being run falsely if the exchange line is seized by an incoming call before the telephonist removes the plug from the exchange jack. If a follow-on call occurs, relay D operates and holds on the ringing and lights the front supervisory lamp during the ringing period. When the telephonist answers relay F releases, contacts F2 loop the line via retard R to trip the ringing and F3 releases relay E so that the call can be extended to an extension as required.

If the extension re-enters the circuit before the rear plug is removed from the extension jack relay A operates in series with the extension loop from battery and earth supplied from contacts E1 and E2. Contact A1 opens the circuit of relay E, but relay E is slow to release and consequently will not interact with relay A. The the reason for making relay E slow to operate is to ensure that it is fully saturated before operation and, therefore, if its circuit is immediately broken by the re-operation of relay A it will not release quickly as would be the case with a normal operation—slow release (heel end slug) relay. When an extension re-enters a circuit in this way, the exchange line is reseized. Two or more speak and dial keys KSD on cord circuits which are in use must not be operated at the same time on account of the electrical coupling between cord circuits.

Night Switching and Through Dialling.—Each cord circuit is equipped with a special key (KNS) for night switching or for use to enable calls to be dialled from extensions. This key disconnects all apparatus in the cord circuit except the rear supervisory relay A and the ringing relay D. When the extension hangs up on a through dialled call, relay A releases and the rear supervisory lamp lights. If a follow-on call occurs relay D operates during the ringing period and flashes the front supervisory lamp. For night switching, battery is switched off from the board. The telephonist cannot supervise the progress of a through dialled call.

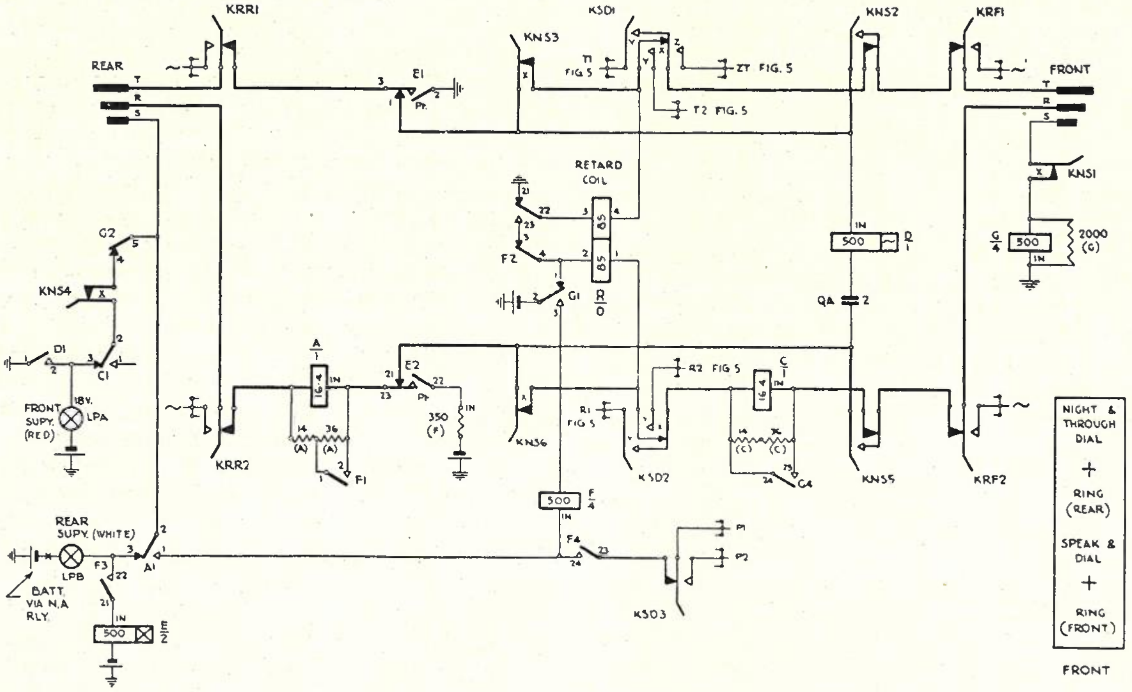

Fig. 4.—Cord Circuit.

Incoming Exchange Calls.—When ringing current is applied to the exchange line circuit (Fig. 3), relay L operates on its 670 ohm winding and locks on its 250 ohm winding dependent on the jack springs. The locking circuit also lights the call lamp. When the front plug is inserted in the jack, relay L releases, the call lamp is extinguished, and the line winding of relay L is disconnected from tip and connected to the ring to improve transmission and remove any charge remaining on the condenser after ringing so as to prevent relay L operating on the condenser discharge on removal of the plug from the jack. With the plug in the exchange jack, relay G in the cord circuit operates and connects retard R across the line to trip the ringing. When the call is extended, relay F operates to remove the retard from the line as previously described.

Telephonist's Circuit.—The dial repeating coil enables a connected extension to speak to the telephonist whilst the cord circuit is prepared for dialling. The repeating coil circuit is disconnected only whilst the dial is off normal. Rectifier MRA is an anti-click device. Its purpose is to prevent high transient voltages passing through the receiver. This device is in fairly common use in Australia, the rectifier used being type 2/2A. Condenser QA and its associated 100 ohm resistance is also an anti-click device as it absorbs the voltage surge which occurs when the speaking key completes the transmitter circuit. The induction coil is an anti-side tone type, line balance being obtained with a 425 ohm N.I. resistance. The most interesting feature of the telephonist's circuit is the fact that the position in the circuit of the transmitter and condenser QE are interchanged relative to Australian practice. The result of this is that no direct current flows through the induction coil. A similar feature occurs in the telephonist's circuits associated with the Melbourne trunk exchange.

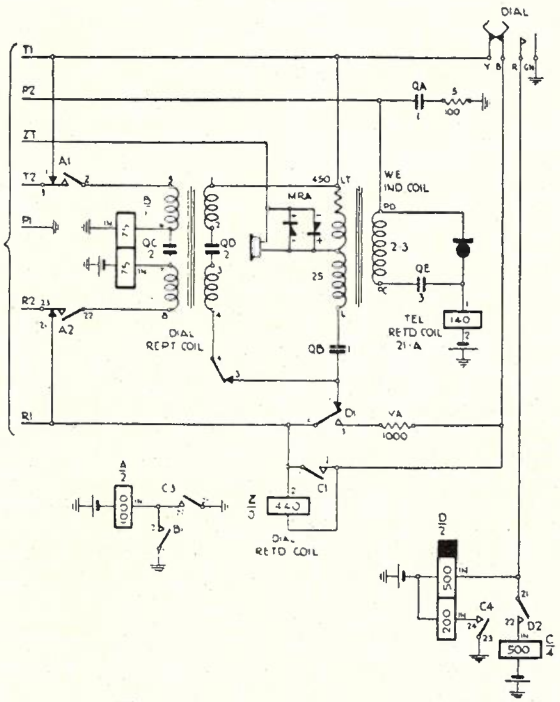

Fig. 5.—Telephonist's Circuit.

THE FINAL SELECTOR REPEATER

O. C. Ryan

The types "E" and "F" Private Automatic Branch Exchanges in which 50 outlet uniselectors are employed as line finders provide for services with up to 89 extension lines and with an originating busy hour traffic of up to 0.12A per extension. The line finder section of the equipment and the details of the rack layout were described in Vol. 3, No. 1, page 36. Each line finder is tied to a final selector repeater, 100 outlet type, which is described in this article.

By utilizing this class of switch, inter-extension calls can be completed by dialling two digits, while access to the public exchange is given by dialling one digit (0) only; that is the switch functions as a final selector on levels 1 to 9 and as a combined group selector and repeater on level 0. If necessary, by means of a simple modification to the "0" level springs, the switch can be made to function as a group selector, that is automatic rotary stepping on two or more levels.

The advantages of combining the final selector repeater and repeater function in the one switch instead of providing additional repeater relay sets, are the saving in rack space, which is of particular importance for small automatic units and the increase in flexibility which is afforded by being able to increase the outgoing exchange lines (within the limit of the number of final selector repeaters provided) without having to provide additional repeater relay sets. This is accomplished at the cost of a slight increase in complexity of the circuit as compared with that of a straight final selector.

A circuit diagram of a typical final selector repeater pre 2000 type equipped with 3000 type relays is shown in Fig. 1. On **extension to extension calls**, the switch functions as a standard final selector. On seizure relay A operates, A 2.3 closes the circuit to relays B and C in parallel whilst A 21.22 is in the circuit to the negative wiper and functions as described later.

The guarding relay B operates, B 1.2 grounds the P trunk from the line finder switch to maintain the busy and hold conditions. B 3.4.5 prepare a circuit for the vertical and rotary magnets, B 21.22 prepare the test circuit for relay H and B 23.24.25 close the ring start circuit and remove ground from the lead to the group control circuit. Relay C operates via C 1000 from ground at A 2.3 and dial tone is connected to the negative calling line via C 1.2 contacts. C 3.4.5 are not required at this stage but C 7.8 prepare a circuit for the vertical magnet V. The ringing circuit is opened at C 21.22 and C 23.24 whilst the function of C 25.26.27 relates to "0" level calls.

On the receipt of the first impulse, relay A restores, closing the vertical magnet circuit via C3 ohms winding, NR 1.2, C 8.7, B 5.4 to ground at A 1.3. The magnet operates and raises the wipers to the first level. The off normal springset N is operated when the shaft is raised and N 1.2 prepares a circuit for the release magnet Z. N 3.4 are in the release trunk circuit, N 5.6 opens the circuit to C 1000 and N 7.8 open the dial tone circuit. Relay C is slow releasing and remains operated during the vertical impulse train. The impulses received in the first train cause V to raise the shaft and wipers to the required level. At the end of the first train of impulses, C after its release lag period restores and C 3.4 complete a circuit for relay E which operates via its 1000 ohm winding and K 4.5 to ground at B 2.1. E 1.2 prepare a circuit for C 1000, E 3.4 open the circuit from the P wiper to prevent the operation of H during rotary action, E 6.7 prepare a loop to the switch ahead for exchange calls, E 21.22 prepare a circuit for E 350 and E 24.25 prepare a circuit for G 1000.

The rotary magnet R operates under the control of the second train of dial impulses. On the receipt of the first impulse in the train, A restores and completes a circuit for R via H 3.4, E 22.21, B 5.4 to ground at A 1.3. The magnet steps the wipers to the first bank contact and with subsequent impulses, to the bank contact of the extension line required. R 1.2 is used for exchange calls. On the first rotary step, the normal rotary springs NR are operated, NR 1.2 open the circuit to C 3 ohms winding, NR 3.4 open the E 1000 circuit and NR 5.6 close the circuit to C 1000 which reoperates. On the opening of the circuit for E 1000, a holding circuit for relay E is maintained from ground at A 1.3 to battery at E 350. As relay E is slow releasing it remains operated during impulsing and on release, it opens the rotary magnet circuit at E 21.22. If the called number is engaged, a circuit is provided for relay G during the slow release period of relay E—battery G 210, H 8.9, K 27.26, G 1000, E 25.24 to ground on the private bank contact, relay G operates and locks via G 210, H 8.9, K 27.26, G 1000, E 25.23, G 25.24, B 22.21 to ground. G 1.2 prepare a circuit for R (exchange call), G 3.4 connect busy tone to the positive calling line, G 5.6 prepare a circuit for E (exchange call) G 23.24 open the circuit to H 1000.

If the called line is free the private wiper will be at battery instead of ground potential and G will not operate. After the release of E, relay H operates from ground, B 21.22, G 24.23, H 1000, E 4.3 to battery on the private bank contact. Relay H switches the negative and positive wipers through to relay F (contacts H 1.2 and 6.7), opens the rotary magnet circuit at H 4.5 and opens the circuit to G at H 8.9. The private bank is grounded by H 21.22 and this direct ground operates the K relay in the called extension line circuit to clear the line relay from the called line. Also, it provides a busy condition to other switches testing this line. H 23.24 provide a holding circuit for H to ground at B 1.2, H 25.26 close the ring-back tone circuit and H 27.28 are in the release magnet circuit.

On the release of E, relay C, after its delay period, restores and completes the ringing circuit for relay F. The C contacts prevent the application of ringing currents before the K relay in the line circuit has had time to operate. Ringing current is supplied via F 300, extension line loop and return to battery via YC 200. When the extension answers F operates and locks via F 400 in that the short circuit across this winding is removed by the opening of contacts F 21.22 arranged for early break. The calling and called extensions are connected by F 4.5 and F 24.25 (ringing current being disconnected by these contacts) and the ring start circuit is opened at F 1.2. Relay D is now connected across the called line and operates and supplies battery to the called extension. D 21.22 maintain a short circuit across relay M. When the calling party replaces the handset on the rest, relay A releases and relays B and H release in turn and complete the release magnet circuit. Z operates and the switch restores to normal. Z 1 provides a guarding ground on the P trunk to prevent seizure during release.

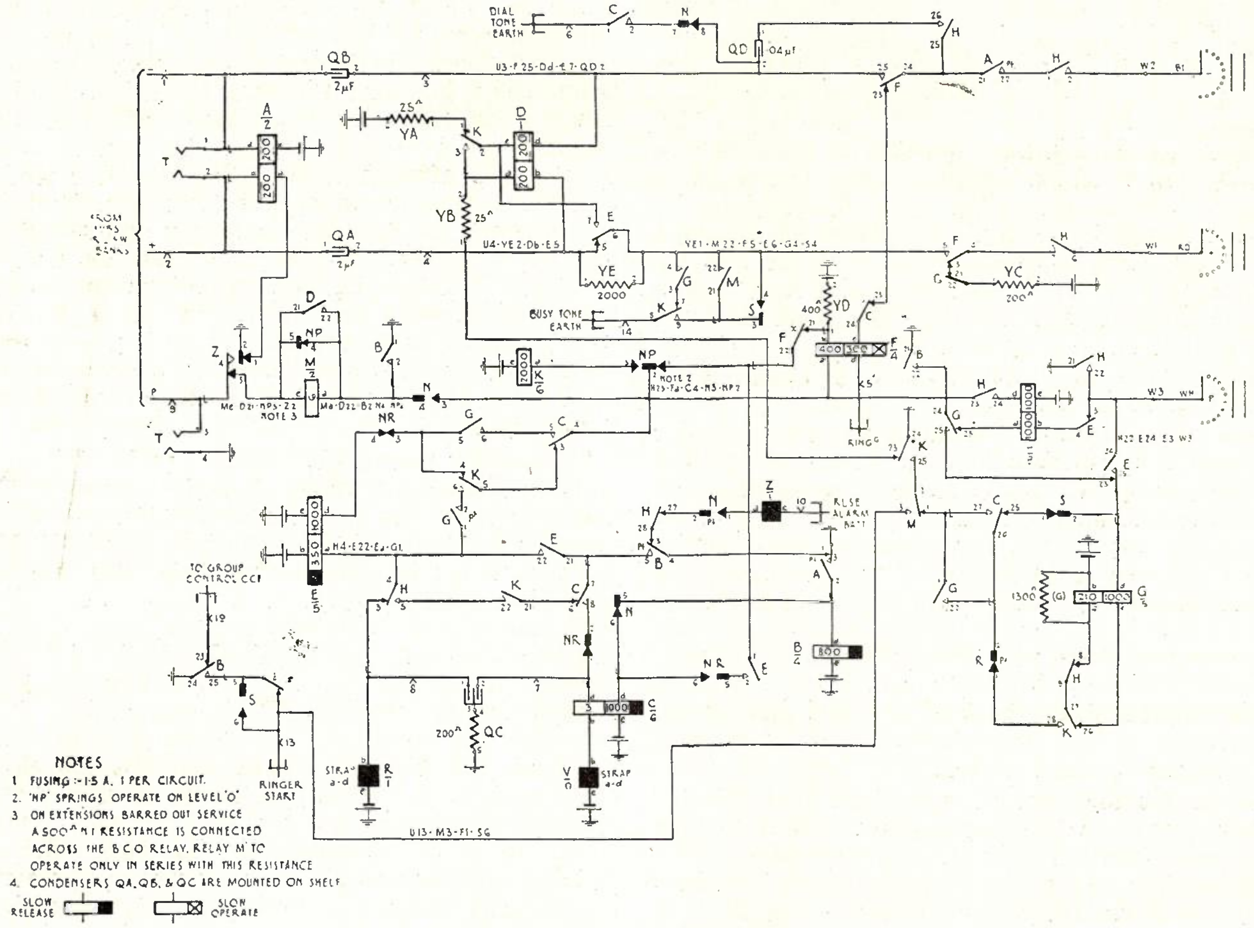

Fig. 1.—Final Selector Repeater.

If an **extension which is not barred exchange access calls the exchange,** digit "0" is prefixed to the call number listed in the directory in that the outgoing exchange lines are trunked from the "0" level of the final selector repeaters. The vertical stepping of the switch is as described for an extension to extension call but on rising to the "0" level, the normal post springset N.P. is operated by the shaft. N.P. contacts 1.2.3 open the short circuit across F 400 and complete circuits for K 1000 which operates to ground at B 1.2. NP 4.5 remove the short circuit for M 6 which operates only when a barred extension calls the "0" level. Relay F operates from battery via its 400 ohm winding to ground at B 1.2 and at F 4.5 and 24.25 prepares a circuit for relay D.

The operation of relay K provides a loop for relay D at K 2.3 whilst K 5.6 prepare a circuit for relay E and the rotary magnet, and K 8.9 prepare a circuit for the busy tone. K 21.22 prepare a circuit for relay E, K 24.25 and 27.28 prepare a circuit for relay G which operates from battery, G 210, H 8.9, K 27.28, R 1.2, C 26.27 (before release of C) to ground at K 25.24.

G 1.2 prepare a circuit for the rotary magnet and E 350 and G 21.22 bridge C 26.27. Relay E operates. The release of C has provided an operate circuit for R from ground at B 1.2, C 4.3, K 5.6, G 2.1, H 4.3, R to battery. R operates and steps the wipers to the first bank contacts. R 1.2 opens the circuit to G 210, therefore G restores and at G 1.2 opens the circuit to R which releases. If the first private bank contact is engaged (grounded) G reoperates on the release of R via ground from the private bank E 25.24, S 2.1, C 25.26, R 2.1, K 28.27, H 9.8, G 210 to battery, and the interaction between R and G continues until a disengaged trunk is reached or all trunks tested busy. On testing a free trunk, after the release of E, relay H operates from battery on the private bank contact, E 3.4, H 1000, G 23.24, B 22.21 to ground. H operates as described under extension to extension calls and the positive and negative trunks are switched to the exchange lines. Further trains of impulses are repeated via A 21.22. Relay E operates on the first impulse in each train from ground, A 1.3, B 4.5, C 7.6, K 21.22, H 5.4, E 350 to battery. E 6.7 short circuit one of the 200 ohm windings of D, the remaining 200 ohm winding is left in the loop circuit to reduce impulse distortion on short exchange lines. The 2000 ohm YE resistance across E 5.6 is provided to prevent the loop being opened and obviates the possibility of false impulses when E restores.

If all trunks are busy, the wipers are stepped to the 11th contact and the 11th rotary step springs S are operated. S 1.2 opens the operate circuit for G, S 3.4 connect busy tone and S 5.6 close the ring start circuit to generate busy tone.

If a **barred extension calls** the exchange the current in the P wire from the line finder (or uniselector) is increased as a 500 ohm resistance is connected across the hold relay in the line finder or the K relay in a uniselector. When the switch steps to the "0" level relay M which is marginal operates owing to the increased current on the P wire. M 1.2.3 open the circuit of G 210 to prevent rotary action and ground the ring start lead to generate busy tone. M 21.22 connect busy tone to the calling line.

Extension to extension calls are not affected as M is short circuited except when the NP springs are operated on the 10th line. Release from the "0" level is as described for extension to extension calls.

AUTOMATIC ROUTINERS IN TYPE 2000 EXCHANGES

T. T. Lowe

Résumé of Earlier Sections.—In previous issues of the Journal (Vol. 4, Nos. 2 and 3) earlier sections of an article describing Automatic Routiners in 2000 Type Exchanges appeared. In the October issue, routine testing and manual test sets were first discussed briefly. The considerations which justify the provision of automatic routiners were then referred to, followed by notes on design and development. The automatic routining equipment at Rockdale Exchange, Sydney, was then briefly described, followed by a detailed description of the operation of the final selector routiner when testing P.B.X. final selectors.

Figs. 1 to 12 were included in Vol. 4, No. 2, Fig. 1 being a photograph of the Routiner and Access Control Rack and the Access Selector Rack, and Fig. 2 a diagram showing schematically the arrangement of the routiner and access equipment. In Vol. 4, No. 3, Figs. 13 to 29 of the detailed description were included. Figs. 3 to 17 indicate the circuit operations at the Access Equipment when a General or Group Routine is performed. The Start Key "KS," one of five Control Keys mounted on the routiner rack, is operated (Fig. 3). The Rotary Distributor Switch steps to No. 2 position (Fig. 4). The bimotional access selector connected to the second contact of the distributor switch takes its first vertical step (Fig. 5). The Access Selector makes its first rotary step and the routiner is connected to the first switch to be tested (Figs. 6 and 7). Circuit arrangements are now completed for the routine test to be performed on the switch (Fig. 8). When the test on the first switch is completed the access selector takes the next rotary step and the next switch is routined (Fig. 9). Fig. 10 shows the conditions when the access selector steps over unequipped positions. When the access selector reaches the 11th rotary position it releases in the normal manner (Figs. 11 and 12). The access selector is stepped to the 3rd level, assuming that the second level is unequipped, the switches connected to the 3rd level being tested in turn (Fig. 13). The access selector is stepped to the 11th rotary contact on the last equipped level and the distributor switch is stepped to the next access selector (Fig. 14). Fig. 15 indicates how unequipped positions on a distributor switch are connected. When the group routine is finished the access selector reaches the 11th rotary contact on the last equipped level (Fig. 16). The Start Key is then restored to normal and the access and distributor switches return to normal (Fig. 17).

Figs. 18 to 23 refer to other functions performed by the access equipment. To continuously routine a particular switch, Key "KCR" is operated and the distributor switch is stepped manually to the required position using Key "KDS" (Fig. 18). The appropriate access selector is then stepped vertically to the required level using Key "KVS" (Fig. 19). The access selector is next stepped to the required rotary contact on the selected level using Key "KRS" (Fig. 20). The routiner is now connected to the desired switch and to continuously routine this switch it is necessary only to operate the Start Key "KS" (Fig. 21). The routiner may be reset at any time during a continuous routine by operating the Reset Key "KR" or by plugging a short circuited plug into the appropriate jack provided on the switch racks adjacent to the switch under test (Fig. 22). When a group routine is being performed and a fault is located, operation of the Step On Key "KSO" resets the testing circuits to normal and steps the access selector to the next switch to be tested (Fig. 23).

Figs. 24 to 29 refer to various alarms associated with the routiner. If a switch fails to operate satisfactorily under the test conditions applied, the routiner stops and the testing mechanic's attention is drawn to the fault by means of the Rack Alarm lamp and bell and the appropriate Test Lamp associated with the routiner (Figs. 16 and 24). If the rotary distributor switch or the rotary test or auxiliary test switches associated with the routiner fail to return to the home position, the Routiner Switch Release Alarm Lamp glows (Fig. 25).

If the access selector vertical magnet is held operated for an unduly long period the Permanent Vertical Alarm lamp will glow (Figs. 25 and 26). If the access selector fails to release due to its "B" relay holding, the Access "B" Hold lamp will glow (Fig. 27). If when its "B" relay is normal, the access selector fails to release, the Access Switch Release Alarm lamp glows (Fig. 28). Fig. 29 shows the circuit arrangements for the Test Start Fail Alarm lamp. This completes the description of the operation of the Access Control Equipment and associated alarms.

In this and later issues of the Journal the operation of the routiner when testing 200 outlet, 2-10 line P.B.X. final selectors will be described.

The following tests are performed by the routiner on final selectors:—

(1) The routiner discriminates between 100 outlet ordinary, 100 outlet 2-10 line P.B.X. and 200 outlet ordinary and 200 outlet 2-10 line P.B.X. final selectors.

(2) The test starts and the final selector under test is guarded against intrusion by ordinary calls.

(3) Tests if the final selector is free or busy and if busy waits until it becomes free.

(4) Tests the conditions of the incoming negative line to the final selector.

(5) Tests the condition of the incoming positive line to the final selector.

(6) Tests that the final selector guards itself against intrusion when it is in use.

(7) Tests that the final selector "A" relay, which is now operated on zero loop, releases satisfactorily when the holding loop is increased to 18,000 ohms.

(8) Tests that the final selector "A" relay operates satisfactorily on minimum operating current, i.e., through 3000 ohms resistance.

(9) Tests the releasing time of the final selector. The final selector "A" relay is first operated through 1500 ohms resistance and the time interval from the instant the loop is removed until the switch is restored to normal is measured. The time interval must not be greater than 350 milli-seconds.

(10) On the incoming lines 1st choice (— and + 1) tests the final selector for satisfactory operation at 10 impulses per second under short-line impulsing conditions which are zero loop with a shunt across the impulse springs of 20,000 ohms in parallel with a 2 μF. condenser and a 100 ohm timing resistance. The switch under test is stepped vertically to the ninth level and then horizontally to the 11th rotary position on the ninth level.

(11) The "Private Guard Fail" test is applied, i.e., the final selector is tested to ensure that ground is not removed from the incoming private wire during impulsing and that the final selector satisfactorily guards itself against intrusion.

(12) The final selector seizes the first test line connected to the 11th rotary contact on the ninth level.

(13) Tests that full earth potential is received from the final selector on the P1/1 lead. (First test line.)

(14) Tests that a satisfactory ring is received from the final selector. If it is desired to check the ringing tone, key K.R.T. is operated. If a buttinski is plugged into the routiner test jack the ringing tone may be observed.

(15) Tests for satisfactory tripping of the ring on a 1200 ohm loop and that battery is reversed over the incoming negative and positive 1 leads to the final selector.

(16) Metering. Tests that a satisfactory positive battery metering pulse is received from the final selector on the "P" wire.

(17) Tests the condition of the outgoing negative lead from the final selector. (First choice, —1 lead, wiper W2.)

(18) Tests the condition of the outgoing positive lead from the final selector. (First choice, +1 lead, wiper W1.)

(19) Tests the condition of the P2/1 lead from

the final selector (wiper W7) which should be free of both ground and battery.

(20) Tests the "Last Party Hold" feature of the final selector.

(21) The final selector is released.

(22) The final selector is tested again under short-line impulsing conditions as in Test 10, but with the private of the first test line earthed (P1/1 lead).

(23) Tests three times that a satisfactory busy signal is received from the final selector. If desired, the busy tone may be observed by operating Key K.B.T. and plugging a buttinski into the Routiner Test Jack.

(24) When the busy tone is being tested the second time, the incoming private wire is again tested to ensure that ground is not removed and that the final selector satisfactorily guards itself against intrusion.

(25) Tests that the outgoing leads from the final selector W2 (—1), W1 (+1) and W5 (P1/1) are clear of both battery and ground.

(26) The final selector is released.

(27) Tests the condition of the incoming positive line (+2, 2nd choice) to the final selector.

(28) On the incoming lines 2nd choice (—, +2) tests the final selector for satisfactory operation at 10 impulses per second under long-line conditions which are 1500 ohms loop with a 2 μF. condenser and 100 ohm timing resistance connected across the impulsing springs. Straight line final selectors are stepped vertically to 9th level and then horizontally to the 11th rotary position on the 9th level. P.B.X. final selectors are stepped vertically to the 9th level and then horizontally to the 10th rotary contact on the 9th level, i.e., to line 90.

(29) If, when testing P.B.X. final selectors, line 90 (2nd choice) is free it is temporarily converted into a busy first line of a test P.B.X. group and the final selector is tested to ensure that it steps automatically to the first free line of the group, i.e., to the 11th rotary contact (2nd choice). If line 90 (2nd choice) which may be a working line is busy the final selector steps automatically to the 11th rotary contact (2nd choice) without interference to the call proceeding on the 90 line.

(30) For 200 outlet final selectors the first test line connected to the 11th rotary contact is busied.

(31) Tests that the final selector seizes the 2nd test line connected to the 11th rotary contact on the 9th level.

(32) Tests that full earth potential is received from the final selector on the P1/2 lead (2nd test line).

(33) Tests the conditions of the outgoing negative lead from the final selector (2nd choice, —2 lead, wiper W4).

(34) Tests the condition of the outgoing positive lead from the final selector (2nd choice, +2 lead, wiper W3).

(35) Tests the condition of the P2/2 lead from the final selector (wiper W8) which should be free of both ground and battery.

(36) The final selector is released.

(37) The final selector is tested again under long line impulsing conditions. This test is carried out on the first test line, but with the private earthed (P1/1 lead).

(38) Tests twice that a satisfactory busy signal is received from the final selector.

(39) The final selector is released.

(40) The "Test Finished" lamp glows. The test on the final selector is completed and the routiner automatically resets to normal.

In the October, 1942, issue under Routine and Access Control Equipment Rack (d), reference is made to a group of four Fault Imitation or Test Control Keys. These are:—

(a) A two position key "K.P.F." Positives Crossed and "K.N.F." Negatives Crossed used to simulate these fault conditions.
(b) A single position key "K.B.T." is used to stop the routiner when listening to the Busy tone.
(c) A single position key "K.R.T." used to stop the routiner when listening to the ringing tone.
(d) A single position key "K.B.F." used to simulate a Busy fault condition.

In this issue Tests 1-10 are included and are described in Figs. 30-45 hereunder. The next issue will contain Tests 11-26, Figs. 46-61, and the article will conclude in the following issue.

Strapping for Discrimination (Fig. 30).—When the Start Key is operated and the access selector is positioned on the first switch to be tested, ground is connected to one of the discriminating leads, DA, DB, DC or DD either from the DS lead via B21-22 operated, AW2 wiper and bank to TX tags, row 2, or from OD 21-22 operated, row 4. The discriminating leads DA, DB, DC and DD are connected to TX tags, row 3. DA lead is used only for 100 outlet, ordinary final selectors, DB lead for 100 outlet, P.B.X. final selectors, DC lead for 200 outlet, ordinary final selectors, and DD lead for 200 outlet P.B.X. final selectors. In the case of ordinary final selectors TX tags, row 2, are strapped to row 3 and the ground from DS lead to row 2 is extended to the DA lead for 100 outlet final selectors and DC lead for 200 outlet final selectors. For P.B.X. final selectors relay OD is provided on the final selector rack and wired to the corresponding TX tag in row 1. In this case the tag in row 2 is strapped to row 1 instead of row 3 and the ground from DS lead to row 2 operates relay OD 2000 to battery. Ground from OD 21-22 operated is extended to TX tag in row 4 which is strapped to corresponding tag in row 3 to which is connected DB lead in the case of 100 outlet P.B.X. final selectors and DD lead in the case of 200 outlet P.B.X. final selectors.

Discrimination (Fig. 31).—Discriminating relays are provided in the routiner and are oper-

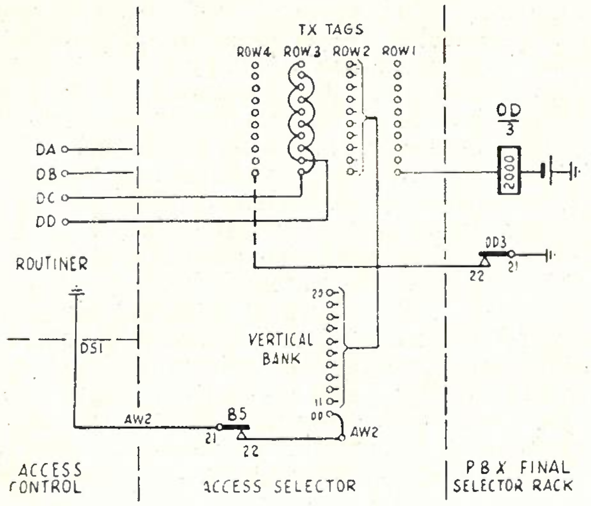

Fig. 30.

ated by the access selector for different types of final selector as follows:—

(1) Ordinary 100 outlet final selectors:—Ground on DA lead operates relay WW 2000 to battery.

(2) 2/10 P.B.X., 100 outlet final selectors:—Ground on DB lead operates relay TT 2000 to battery. Ground via TT 21-22 operates relay WW 2000 to battery.

(3) Ordinary 200 outlet final selectors:—Ground on DC lead operates relay TP 2000 to battery. Ground via TP 21-22 operates relay WW 2000 to battery.

(4) 2/10 P.B.X. 200 outlet, final selectors:—Ground on DD lead operates relays TP 1000 and TT 1000 in series to battery. Ground via TT 21-22 and TP 21-22 operate relay WW 2000 to battery.

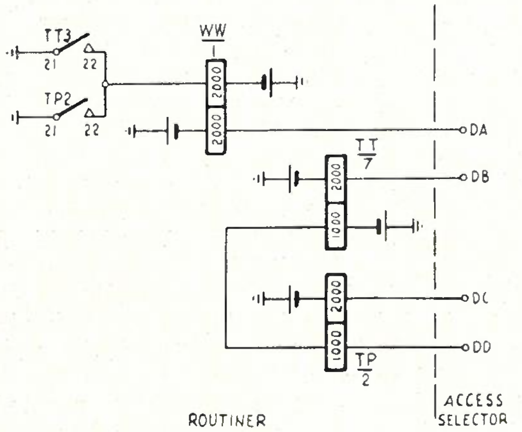

Fig. 31.

Test Start Prepared. Final Selector Guarded (Fig. 32).—When relay WW operates, ground is extended from H 6-7 operated, key KSO 7-8 normal, HD 1-2 operated, RE 21-22 normal, TS lead, WW 2-3 operated, relay TS 2000, TI bank and wiper, Test switch drive magnet to battery. Relay TS operates and locks on its second 2000 ohm winding from ground on TS lead via TS 21-22 operated, relay TS 2000 to battery. "Start" lamp LPEI lights from ground via TS 25-26 operated, T2 wiper and bank, lamp LPEI, YT 1200 ohms to battery. Relay PT now operates from ground via TS 6-7 operated, relay PT 20 + 800, YL 600 ohms to battery. PT 24-25 operated, short circuits relay PT 800 ohm winding and ground is extended from TS 6-7 operated via relay PT 20, PT 24-25 operated, RT 24-25 normal, PF 5-6 normal, PM 3-4 normal, PE 5-6 normal, TX 27-28 normal, Key KBF 1-2 normal, to "P" lead of final selector under test to provide a guarding earth through TX 27-28 when TX relay operates (see Fig. 33). Relay PE now operates from ground via TS 8-9 operated, T8 wiper and bank, relay PE 500 to battery.

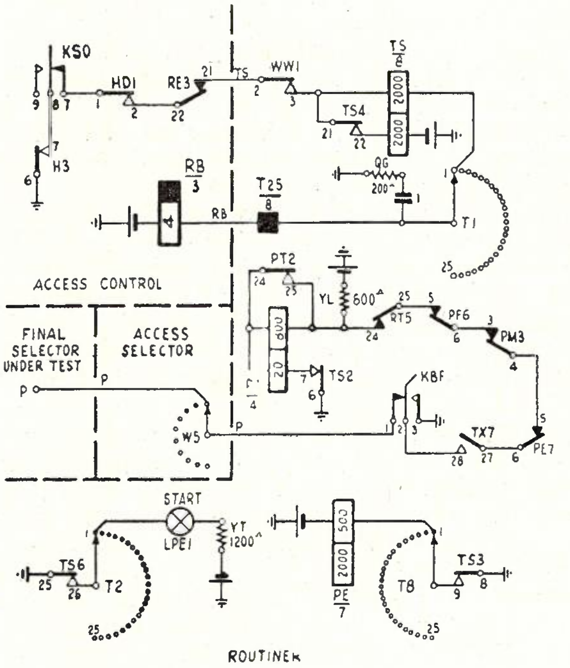

Fig. 32.

Test Start (Fig. 33).—Relay PE operates relay PF from ground via PE 1-2 operated, relay PF 2000 to battery. PF 21-22 operated, extends ground via relay TX 2000, ATI bank and wiper, AT magnet to battery. Relay TX operates and locks from ground via TS 27-28 operated, TX 21-22 operated, relay TX 2000 to battery. TX 6-7 operated extends ground via T5 wiper and bank, YF 200, YB 50, TL 3-4 normal, WT 3-4 normal, relay LT 500 to battery and relay LT operates. LT 3-4 operated closes circuit for relay DS from ground via relay DS 500 + 4 ohms, LT 3-4 operated, TX 1-2 operated, T3 bank and wiper, AE 3-4 normal, test switch drive magnet to battery. Relay DS operates and closes the stepping circuit for the T magnet which steps test switch to position 2 after a delayed step (See Fig. 34).

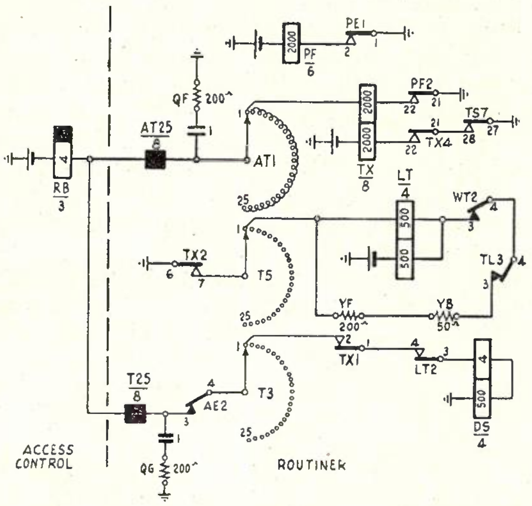

Fig. 33.

Delayed Stepping (Fig. 34).—DS 1-2 operated connects interrupted ground to relay IP 2000 which operates with each ground pulse. On the first pulse relay IP operates relay IQ from ground via DS 3-4 operated, IP 2-3 operated, relay IQ 800 to battery. When the ground pulse ceases, relay IP releases and relay IR operates from ground via DS 3-4 operated, IP 1-2 normal, relay IR 800 to battery. Relay DX now operates during the slow release time of relay IQ from ground via IQ 1-2 operated, IR 1-2 operated, DT 1-2 normal, relay DX 1000 to battery. When relay IQ releases relay DX holds in series with relay DT from ground via DS 23-24 operated, relay DT 1000, DX 1-2 operated, relay DX 1000 to battery. Relay DT also operates and when relays IP, IQ and IR are again operated by the next ground pulse a circuit is closed from ground via IQ 1-2 operated, IR 1-2 operated, DT 2-3 operated, DS 21-22 operated, relay DS4, LT 3-4 operated, TX 1-2 operated, T3 bank and wiper, AE 3-4 normal test switch drive magnet to battery. The test switch drive magnet operates and when its circuit is broken at IQ 1-2 by the release of relay IQ it releases and, in doing so, steps test switch to Position 2.

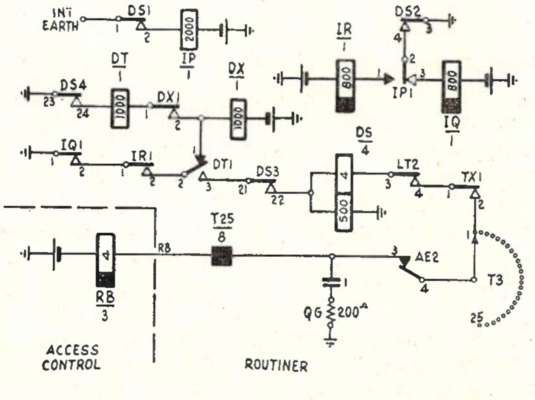

Fig. 34.

Test Switch Position 2—Selector Busy (Fig. 35).—When the test switch steps to Position 2 the "Start" lamp, LPE 1, ceases glowing and the "Selector Busy" lamp, LPE 2, lights from ground via TS 25-26 operated, T2 wiper and bank, lamp LPE 2, YT 1200 to battery. If the selector is busy, relay PE will be held from ground on the "P" lead from the selector via key KBF 1-2 normal, TX 27-28 operated, PE 6-7 operated, relay PE 2000 to battery. If the selector is free or becomes free, the ground on the "P" lead is removed and relay PE will release. PE 1-2 normal, opens the circuit to relay PF which releases. Relay TL operates from ground via TX 6-7 operated, T5 wiper and bank, relay TL 2000 to battery. TL contacts maintain relay LT operated, from ground via TL 21-22 operated, relay LT 500, WT 3-4 normal, TL 4-5 operated, YA 50, YH 200 to battery. After a delayed step the test switch drive magnet operates from ground via IQ 1-2 operated, IR 1-2 operated, DT 2-3 operated, DS 21-22 operated, relay DS 4, LT 3-4 operated, PF 3-4 normal, T3 bank and wiper, AE 3-4 normal, "T" magnet to battery. When "T" magnet circuit is broken at IQ 1-2 on the release of relay IQ, the "T" magnet releases and in doing so steps the test switch to Position 3.

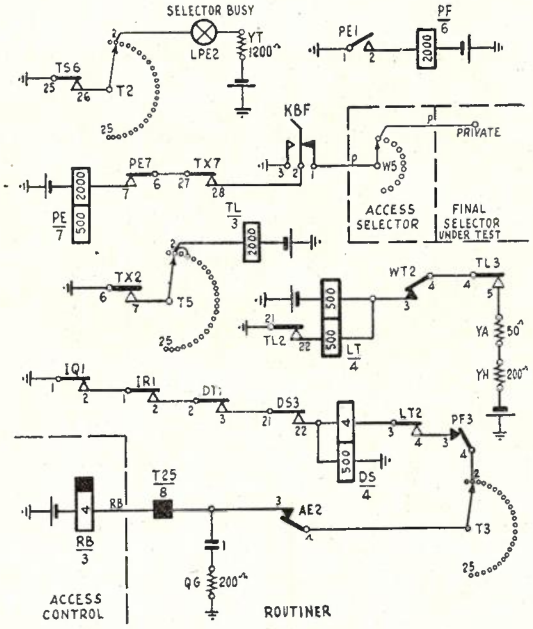

Fig. 35.

Test Switch Position 3 — Incoming Negative Line (Fig. 36).—When the Test switch steps to position 3 the "Selector Busy" lamp LPE 2 ceases to glow, the "Incoming Negative Line" lamp LPE

3 lights and relay CW operates in series with the lamp from ground via TS 25-26 operated, T2 wiper and bank, lamp LPE 3, relay CW 1200 to battery. CW 1-2 operated, and CW 21-22 operated, short circuit resistances YA 50 and YB 50 and the negative line is connected to relay LT from battery via final selector relay "A" 200 ohm winding, D 4-5 normal, access selector W2 bank and wiper, negative lead, TX 23-24 operated, T6 wiper and bank, key KNF 22-23 normal, to relay LT. Relay TL releases, its circuit being broken at T5 bank (see Fig. 35), and ground is connected to relay LT, via TX 6-7 operated, T5 wiper and bank. The windings of relay LT are differentially connected so that if the resistance of the coil of "A" relay in the final selector is not 200 ohms, or if negative and positive leads are reversed, LT relay will operate and disconnect the stepping circuit of the Test switch at LT 23-24. If the conditions are correct, relay LT will not operate and the test magnet will operate from ground via IQ 1-2 operated, relay DS 4, LT 23-24 normal, T3 bank and wiper, AE 3-4 normal, test switch drive magnet to battery. When circuit is broken at IQ 1-2 the test magnet will release and in doing so step the Test switch to Position 4 after a delayed step.

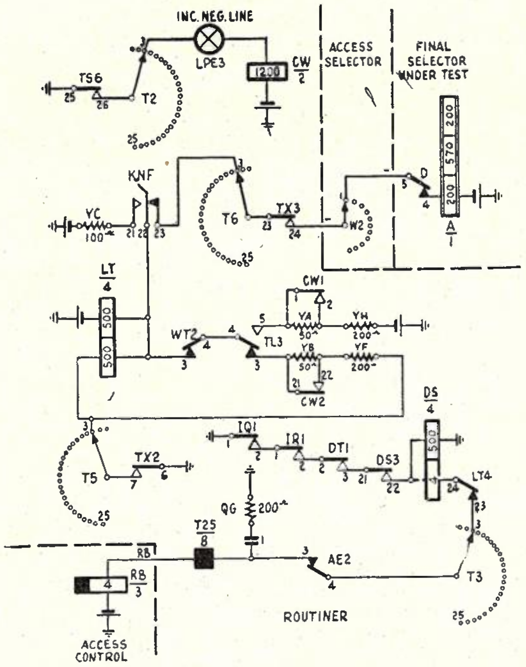

Fig. 36.

Test Switch Position 4—Incoming Positive Line (Fig. 37).—When the Test switch steps to Position 4 the "Incoming Negative Line," lamp LPE 3 ceases glowing and the "Incoming Positive Line" lamp LPE 4 lights in series with relay CW which also operates from ground via TS 25-26 operated, T2 wiper and bank, lamp LPE 4, relay CW 1200 to battery. CW 1-2 operated, short circuits YA 50. Relay TL operates from ground via TX 6-7 operated, T5 wiper and bank, relay TL 2000 to battery. The incoming negative line is disconnected at T6 bank (see Fig. 36) and the incoming positive line is connected to relay LT from ground via final selector "A" relay 200 ohm winding, D 23-24 normal, access selector wiper W1, + 1 lead, CQ 7-8 normal, TX 25-26 operated, T7 wiper and bank, KPF 24-25 normal, relay LT 500 to battery and in parallel from ground via TL 21-22 operated, relay LT 500, WT 3-4 normal, TL 4-5 operated, YH 200 to battery. If the positive potential is correct relay LT being differentially connected will not operate and the Test switch will step to Position 5 after a delayed step in the same manner as described in Fig. 36.

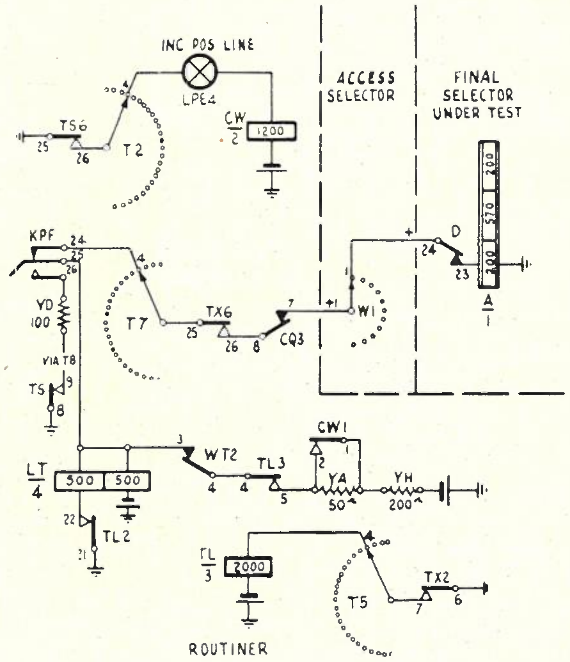

Fig. 37.

Test Switch Position 5 — Guard (Fig. 38).—When the Test switch steps to Position 5, the "Incoming Positive Line" lamp, LPE 4, ceases glowing and the "Guard" lamp LPE 5 lights from ground via TS 25-26 operated, T2 wiper and bank, Guard lamp LPE 5, YT 1200 to battery. The incoming lines to the selector are looped from battery via final selector relay "A" 200 ohm winding, D 4-5 normal, access switch W2 bank and wiper, negative lead, TX 23-24 operated, T6 wiper and bank, T7 bank and wiper, TX 25-26 operated, CQ 7-8 normal, positive 1 lead, access switch W1 wiper and bank, D 23-24 normal, final selector relay "A" 200 ohm winding to ground. Final selector relay "A" operates and closes circuit for relay "B" which operates and returns ground on the "P" lead via J 3-4 normal, B 3-4 operated, access switch W5 bank and wiper, "P" lead, key KBF 1-2 normal, TX 27-28 operated, PT 24-25 operated, relay PT 20, TS 6-7 operated to ground. Relay PT is shunted and releases and the test switch drive magnet is operated from ground via IQ 1-2 operated, DT 2-3 operated, DS 21-22 operated, relay DS 4, PT 21-22 normal, T3 bank and wiper, AE 3-4 normal, test switch drive magnet to battery. When its circuit is broken at IQ 1-2 after a delayed step the test switch drive magnet releases and steps the test switch to position 6. If the "P" lead is unguarded, that is, no ground is returned from final selector "B" relay, relay PT will not be shunted. It will remain operated from battery via YL 600 and will extend ground to guard "P" lead from TS 6-7 operated, whilst the test switch will not step as its circuit will be broken at PT 21-22 operated.

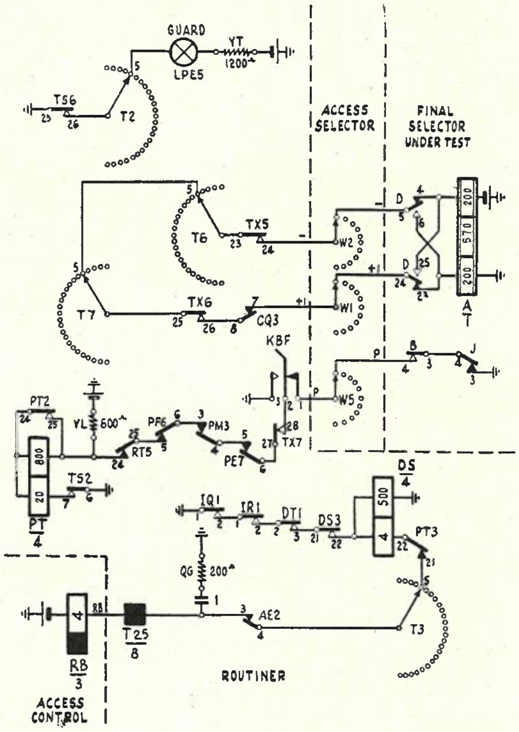

Fig. 38.

Test Switch Position 6 — Final Selector "A" Relay Releases on Loop Resistance of 18,000 Ohms (Fig. 39).—When the test switch steps to position 6 the "Guard" lamp LPE 5 goes out and "A Relay Release" lamp LPE 6 lights from ground via TS 25-26 operated, T2 wiper and bank, lamp LPE 6, YT 1200 to battery. A high resistance loop is placed across the incoming lines from negative lead, via TX 23-24 operated, T6 wiper and bank, YW 3000, YXB 5000, YXA 10,000, T7 bank and wiper, TX 25-26 operated, CQ 7-8 normal to positive 1 lead. The final selector "A" relay should release due to the reduced current flowing through the 18,000 ohm loop followed by the release of relay "B" which removes the ground from the "P" lead and allows relay PT to operate from ground via TS 6-7 operated, relay PT 20 + 800, YL 600 to battery (see Fig. 38). After a delayed step, the test switch drive magnet operates from ground via IQ 1-2 operated, IR 1-2 operated, DT 2-3 operated, DS 21-22 operated, relay DS 4, PT 21-22 operated, T3 bank and wiper, AE 3-4 normal, test switch drive magnet to battery. When its circuit is broken at IQ 1-2 the test switch drive magnet releases and steps the test switch to position 7.

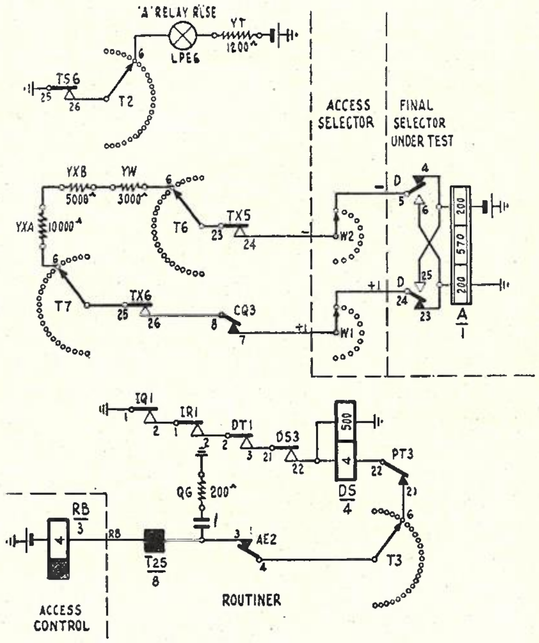

Fig. 39.

Test Switch Position 7 — Final Selector "A" Relay Operated Through 3000 Ohm Resistance (Fig. 40).—When the test switch steps to position 7 the "A Relay Release" lamp goes out and "A Relay Operated" lamp LPE 7 lights from ground via TS 25-26 operated, T2 wiper and bank, lamp LPE 7, YT 1200 to battery. The incoming lines are looped through YW 3000 from negative lead via TX 23-24 operated, T6 wiper and bank, YW 3000, T7 bank and wiper, TX 25-26 operated, CQ 7-8 normal, positive 1, thus allowing the minimum operating current for final selector "A" relay to flow. Relay "A" operates followed by relay "B" and ground is returned on the "P" lead (see Fig. 38). Relay PT is shunted and releases. After a delayed step the test switch is stepped to position 8 in the same manner as described for Fig. 38.

Test Switch Position 8—Preparation for Release Timing. Final Selector "A" Relay Operated Through 1500 Ohms Resistance (Fig. 41).—When the test switch steps to position 8 the "A Relay Operate" lamp goes out and the "Release Timing" lamp LPE 8 lights from ground through TS 25-26 operated, T2 wiper and bank, lamp LPE 8, YT 1200 to battery. Relay RT operates to

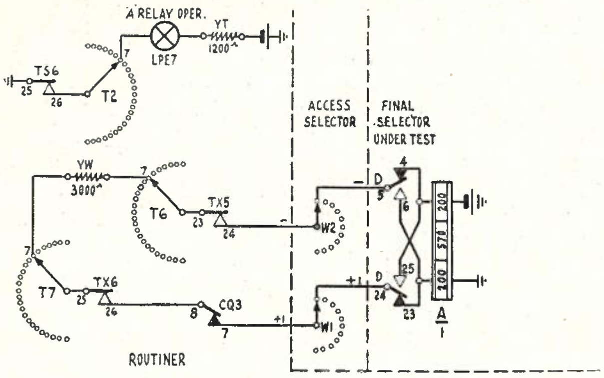

Fig. 40.

ground via TX 6-7 operated, T5 wiper and bank, relay RT to battery. With the test switch in this position the final selector loop is extended from negative lead via TX 23-24 operated, T6 wiper and bank, S5 bank and wiper, YU 1500, T7 bank and wiper, TX 25-26 operated, CQ 7-8 normal to positive 1 lead. Final selector relays "A" and "B" are operated as in Fig. 38 and ground is returned on the "P" lead via key KBF 1-2 normal, TX 27-28 operated, PE 5-6 normal, PM 3-4 normal, PF 5-6 normal, RT 25-26 operated, S6 wiper and bank and in parallel through relays RL 2000, and RS 1500 to battery. Relays RS and RL operate.

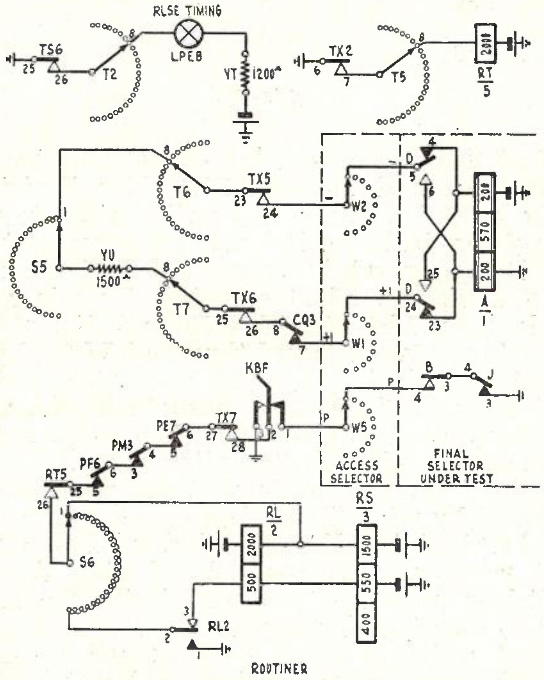

Fig. 41.

Test Switch Position 8—Release Timing (Fig. 42).—With relays RL and RS operated, circuit is completed for relay RG from ground via TS 1-2 operated, S8 wiper and bank, RL 21-22 operated, RS 1-2 operated, AE 23-24 normal, relay RG 400, YE 120 to battery. Relay RG cannot operate as it is shunted by RT 22-23 operated, 20 IPS springs, and RG 21-22 normal. When the 20 IPS springs are operated, this shunt is removed, and relay RG operates and RG 22-23 operated close the circuit for the sender switch drive magnet from ground at TS 1-2 operated. The sender switch steps at the rate of 20 steps per second. Relays RL and RS hold during stepping to ground on the "P" wire via S6 wiper and bank and RL 2-3 operated (See Fig. 41). When the sender switch reaches position 4 the final selector loop is broken at S5 bank (see Fig. 41). Final selector relay "A" releases and allows "B" relay to release after an interval and remove ground from the "P" lead. This releases relays RL and RS and ground via RL 1-2 normal guards the final selector on the "P" wire (see Fig. 41). If ground is not removed from the "P" lead when the sender switch reaches position 11, relay RS locks from ground via TS 8-9 operated, S4 wiper and bank, RS 21-22 operated, relay RS 400 to battery. When the sender switch reaches position 25 the "Release Timing Slow" lamp will light from ground at TS 8-9 operated through relay RS which holds. If the release time is less than 350 ms. relay RS will have released and the test switch drive magnet will operate from ground via Tdm TS 4-5 operated, RS 3-4 normal, RG 1-2 operated, T3 bank and wiper, AE 3-4 normal, T magnet to battery. In operating the test switch drive magnet breaks its own circuit at Tdm and, on releasing, drives test switch to position 9.

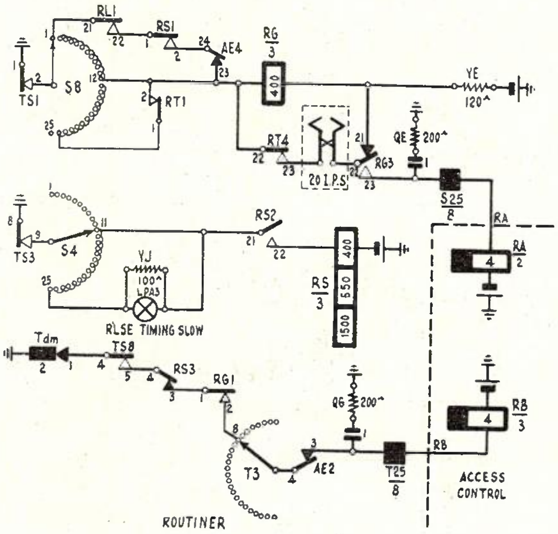

Fig. 42.

Test Switch Position 9—Impulsing Short Line, Stepping Sender Switch at 10 I.P.S. (Fig. 43).—When the Test switch steps to position 9 the "Release Timing Slow" lamp LPE 8 ceases glowing and the "Impulsing Short Line" lamp LPE 9 lights from ground via TS 25-26 operated, T2 wiper and bank, lamp LPE 9, YT 1200 to battery. Relay RT releases, its circuit being broken at T5 bank contact (see Fig. 41). Relay SS operates from ground via TX 6-7 operated, T5 wiper and bank, S7 wiper and bank, relay SS 2000, to battery and locks via SS 21-22 operated. SS 1-2 operated close circuit for relay RG from ground via TS 1-2 operated, S8 wiper and bank, SS 1-2 operated, AE 23-24 normal, relay RG 400, YE 120 to battery. Relay RG will not operate as it is shunted via RT 21-22 normal, 10 IPS springs and RG 21-22 normal. When the 10 IPS springs open, the shunt is removed and relay RG operates. RG 22-23 operated close circuit for sender switch drive magnet from ground at TS 1-2 operated and drive magnet steps at 10 steps per second.

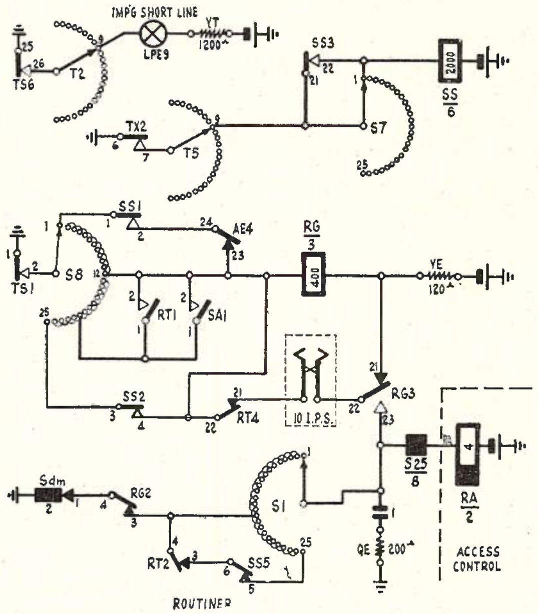

Fig. 43.

Test Switch Position 9—Impulsing Short Line, Stepping Final Selector Vertically to 9th Level (Fig. 44).—When the sender switch reaches position 2, relay PE operates from ground via TS 8-9 operated, S4 wiper and bank, SA 7-8 normal, RT 5-6 normal, relay PE 500 to battery. Relay PE is held operated by ground on the private from final selector under test through KBF 1-2 normal TX 27-28 operated, PE 6-7 operated, relay PE 2000 to battery. When the sender switch reaches position 3, relay PE is dependent upon ground on the "P" wire from the final selector. With the sending switch stepping at 10 IPS the final selector "A" relay receives 9 impulses to step the switch to the 9th vertical level under short line impulsing conditions, the impulsing circuit being from final selector relay "A" via— lead, TX 23-24 operated, T6 wiper and bank, SS 23-24 operated, 10 IPS springs, PD 3-4 normal, T7 bank and wiper, TX 25-26 operated, CQ 7-8 normal, positive 1 lead to final selector relay A. Short line conditions are provided by shunting the 10 IPS springs with YY 20,000 ohms via LL 28-29 normal in parallel with spark quench QB 100 ohms and 2μF condenser. The 9 impulses are sent as follows:—For the first 3 steps of sending switch the 10 IPS springs are short circuited via S5 bank and wiper and SS 23-24 operated. From positions 4 to 12 inclusive the short circuit is removed and 9 impulses are sent to the final selector. On position 13 the short circuit is again placed on the 10 IPS springs via SA 25-26 normal and S5 bank and wiper and on position 14 is maintained via SA 27-28 normal and S5 bank and wiper. From position 15 to 25 the short circuit is via S5 bank and wiper only. When the sending switch reaches position 13 (see Fig. 43) relay RG releases, its circuit being broken at S8 bank and the sending switch self drives to position 25 from ground via Sdm, RG 3-4 normal, S1 bank and wiper, "S" magnet to battery. With the "S" switch on position 25, relay RG reoperates from ground via TS 1-2 operated, S8 wiper and bank SS 3-4 operated, relay RG 400, YE 120 ohms to battery. When the shunt is removed by the opening of the 10 IPS springs the sending switch again steps at 10 steps per second. Relay SA also operates when the sending switch is on position 25 from ground via TX 6-7 operated, T5 wiper and bank, S7 wiper and bank, PE 3-4 operated, relay SA 2000 to battery and locks via SA 21-22 operated.

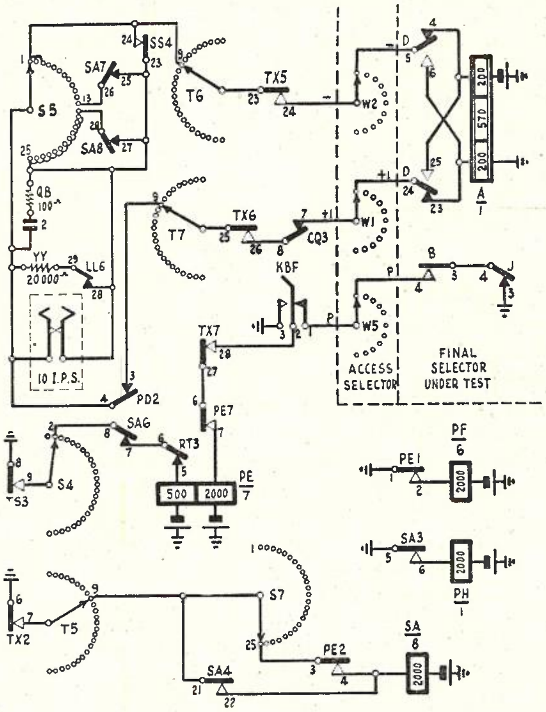

Fig. 44.

SA 5-6 operated extends ground to relay PH 2000 which operates.

Test Switch Position 9—Auxiliary Test Switch Position 2—Impulsing Short Line, Stepping Final Selector to 11th Rotary Contact (Fig. 45).—When PH relay operates it completes a circuit for the auxiliary test switch drive magnet from ground via ATdm, TX 4-5 operated, T4 wiper and bank, PH 1-2 operated, AT3 bank and wiper, AE 21-22 normal, AT drive magnet to battery. AT drive magnet operates and in releasing steps AT switch to position 2. On position 2 relay K is connected to the P 1-1 wire of the test line. The sending switch sends 11 impulses to the final selector in the second impulse train in the same manner as described in Fig. 44, with the exception that on positions 13 and 14 of the S5 bank the short circuit across the 10 IPS springs is removed by the operation of SA 25-26 and SA 27-28. During the time the sending switch is passing over positions 15, 16 and 17 the "C" relay in the final selector should release and allow the final selector switching relay "H" to operate. Relay K will then operate from ground via H 3-4 operated, WS 4-5 normal, W5 wiper and bank, miscellaneous connection strip, P 1-1 lead, CP 23-24 normal, AT7 wiper and bank, PD 23-24 normal, YG 200 ohms, relay K 1300 to battery. K relay locks via K 21-22 operated. If relay K has not operated by the time the sending switch reaches position 18, relay PD operates from ground via TX 6-7 operated, T5 wiper and bank, S7 wiper and bank, LL 23-24 normal, PH 21-22 operated, K 23-24 normal, relay PD 2000 to battery. PD 23-24 operated, disconnects relay K from the P 1-1 lead, and PD 3-4 operated disconnects the loop from the final selector. Final selector relay "A" releases followed by relay "B" which removes ground from the private wire and allows relay PE to release and release relay PF (see Fig. 44). This prevents the test switch drive magnet operating and the "Impulsing Short Line" lamp remains glowing.

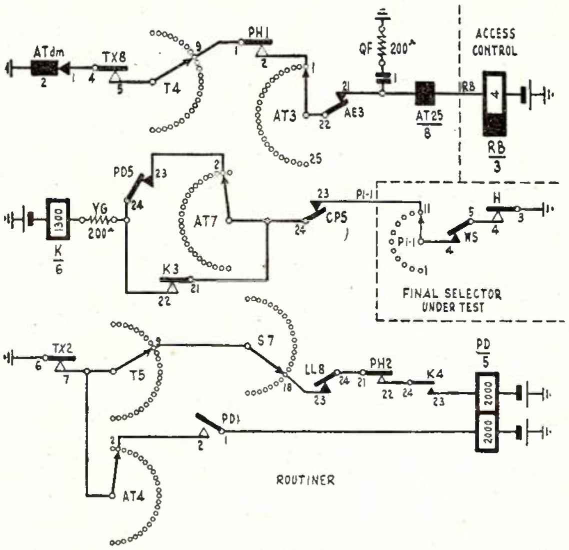

Fig. 45.

THE FUNDAMENTALS OF EXHAUST DESIGN

Alfred B. Greig

Introduction.—Individual exhaust ventilation is now being used extensively in industry for the removal at the point of generation of toxic, explosive, or otherwise harmful concentration of dusts, fumes, mists, vapors and gases. Industrial processes differ markedly, however, in their characteristics with respect to the application of exhaust ventilation, and it is not possible to prepare one set of specifications which will suffice for the successful design and operation of every exhaust system. Each process constitutes an independent problem; there are, however, certain fundamental requirements common to all exhaust systems which should serve as the basis of design in every case.

It has not been general practice in the past to test new exhaust systems to determine the degree of control effected, nor have such systems been described in terms of basic engineering specifications. The experience gained in the design of exhaust systems has not been evaluated and systematised and made generally available to designers. This paper is an attempt to assemble in ordered fashion the fundamental concepts and data available and to indicate the manner in which these influence design, with particular reference to the application of individual exhaust systems to P.M.G. Workshops plant.

Definitions

Dusts: Solid particles generated by handling, crushing, grinding, rapid impact, detonation and decrepitation of organic or inorganic materials. Dusts do not tend to flocculate except under electrostatic forces; they do not diffuse in air, but settle under the influence of gravity.

Fumes: Solid particles generated by condensation from the gaseous state, and often accompanied by a chemical reaction such as oxidisation. Fumes flocculate and sometimes coalesce.

Mists: Suspended liquid droplets generated by condensation from the gaseous to the liquid state or by breaking up a liquid into a dispersed state, such as by splashing, foaming and atomising.

Vapors: The gaseous form of substances which are normally in the solid or liquid state and which can be changed to these states either by increasing the pressure or decreasing the temperature. Vapors diffuse.

Gases: Normally formless fluids which occupy the space of enclosure and which can be changed to the liquid or solid state only by the combined effect of increased pressure and decreased temperature. Gases diffuse.

Plant Lay-out

Processes to be connected to one exhaust system should be located close together and arranged symmetrically about a centre; purpose (1) to permit the use of the shortest lengths of pipe and least number of bends, and (2) to ensure proper proportioning of air flow from the hoods.

Processes generating different kinds of dusts, fumes, or vapors must never be connected to the same exhaust system when the mixture results in the formation of toxic, inflammable or explosive compound.

It is undesirable to connect to the same exhaust system, processes whose requirements with respect to the velocities required for the transportation of the different materials collected differ widely or where there is a wide difference in the initial resistance of the pieces of equipment being exhausted. If such connections must be made, the higher velocities and static suction values should control the selection of fan and motor and determine pipe sizes. Scattered processes and equipment which is operated only infrequently are protected most economically by means of a separate exhaust apparatus connected to each machine.

The Exhaust Hood

The dispersion of contaminating material into the atmosphere requires energy, which can be supplied in the following ways:—

1. **Solid and Liquid Particles.**

(a) If they are large enough and are thrown off with sufficient velocity they will be dispersed by the kinetic energy of their own motion, i.e., by dynamic projection.

(b) Microscopic particles can be dispersed but little distance by virtue of their own kinetic energy because of the relatively great resistance to the movement of small bodies through the air.

(c) Microscopic particles are dispersed primarily by the movement of the air in which they are suspended.

2. **Vapors and Gases.**

(a) The maximum velocity of diffusion does not exceed 1 f.p.m. and is, therefore, an unimportant dispersing force.

(b) Vapors and gases lighter or heavier than air rise or fall from their source, but the velocity of escape is not high unless there is considerable difference in density. Heavy gases may collect in pools or pockets of high concentration unless particular attention is paid to the question of air stagnation. A vapor or gas normally heavier than air may escape at a high temperature so that its density is reduced below that of air, thus causing it to rise.

(c) Vapors and gases escaping into the atmosphere at approximately the same density as the room air are dispersed primarily by air movement.

In order to prevent the dispersion of atmospheric impurities it is necessary to eliminate or otherwise control the energy of dispersion—which means, in most cases, the control of air motion. The primary purpose of the exhaust hood, therefore, is to confine and exhaust contaminated air rather than to remove the contaminated material from the air. This concept is important because it directs attention at once to the primary point of attack, namely, the source of air motion.

Control of Air Motion.—The problem is twofold: First, eliminate or reduce the velocity of air currents wherever possible around hazardous processes by eliminating or otherwise controlling the sources of air motion; second, air motion which cannot be eliminated must be brought under control, i.e., the direction of motion must be changed so that all air flow is into the exhaust system.

Before the actual design of an exhaust hood is completed it is essential to determine the nature, magnitude and direction of action of dispersing air currents and to eliminate these as far as possible by simple direct means, such as by causing large particles which are dynamically projected along a well-defined path to travel directly into an exhaust hood. If this is not possible, provide baffles against which the large particles will impinge, thus destroying their motion and with it the air drag which causes the dispersion of minute particles.

Hood Design.—The object is to capture the contaminated air by means of air flow established toward and within the hood and to deliver this into the exhaust piping. It is quite evident that solid and liquid particles thrown off by dynamic projection cannot be captured by air motion acting in the opposite direction since the air velosity required is so high as to be impractical (as high as ten times the initial velocity of the particle and not less than that required to transport the particle horizontally or vertically). It is, therefore, best to locate the hood opening, or part of it, in the path of the escaping material, thus utilizing its kinetic energy for its own capture and/or to employ suitable hood enclosures or baffles to break the passage of the large particles.

Design and locate the hood to provide the necessary air velocity with the lowest volume of air. The required volume of air may be calculated from the following equations:—

(a) Within a semi-enclosure such as a spray booth:

$$Q = V_h A_h$$

where Q = volume of air handled, c.f.m.
V_h = required air velocity at the face of the hood in f.p.m.
A_h = area of hood face normal to the air flow in square feet.

Example: A paint spray booth 4′-0″ x 5′-0″ in area requires a total air flow of 2400 c.f.m. to produce a velocity of 120 f.p.m. past the object being sprayed within the hood.

(b) Outside an unobstructed exhaust hood:

$$Q = 10\,V_g\,(X^2 + 0.1\,A_h)$$

where V_g = required air velocity at point of generation
X = distance in feet from face of hood to point of generation
A_h = area of hood opening in square feet.

Example: Determine the total rate of air flow through a 3″ x 6″ hood located at a distance of 6″ from a process requiring an air velocity of 400 f.p.m. for its control.

$Q = 10 \times 400\,(0.25 + 0.0125) = 1050$ c.f.m.

When the hood lies on a flat surface Q in the equation may be reduced by 25% for the same value of V. An equal reduction is permitted when a flange is added to the hood.

(c) A hood suspended over a tank or table:

$$Q = 1.4\,V_{pd}\,PD.$$

Where V_{pd} = required air velocity through the open area between the hood and the tank f.p.m.
P = perimeter of hood in feet
D = distance from the outer edge of the tank or other surface to the edges of the hood suspended over it in feet.

Example: A hood 4′-0″ x 6′-0″ in dimension. Determine the total rate of air flow into the hood necessary to maintain an average velocity of 50 f.p.m. through the open area between the tank and the hood.

$$Q = 1.4 \times 50 \times 20 \times 2.06 = 2880 \text{ c.f.m.}$$

On account of the great variety of machines producing dust and the widely different conditions of operation no specific method of design can be laid down, but the following points must always be borne in mind:—

At all hoods there should be an entire freedom of eddy currents as these decrease the efficiency of the system. Thus the dust-collecting hood should be designed with a so-called "stream-line" effect; that is, the area of the hood should taper gradually to the pipe and all abrupt bends within the hood should be avoided. Chip traps are not recommended for this reason, but where the danger of large particles passing through the piping, and perhaps damaging the fan exists, a wire mesh across the throat of the hood is recommended. The throat hood area should not be less than the area of the connecting exhaust pipe.

Particular attention should be given to the design of the hoods so that the action of the cutter or of the wheel will assist the exhaust system by discharging the refuse in the direction of the flow of air toward the throat of the hood.

In some cases, such as where grinding wheels are used, hoods must be constructed for more than merely collecting dust. They must constitute a guard in case the wheel flies to pieces. Safety hoods built of mild steel and strengthened with angle iron will prove amply strong in the case of a wheel breaking. They are superior to cast-iron hoods in that they will not crack and break.

Hoods should be constructed so that the peripheral protecting member can be adjusted to the constantly decreasing diameter of the wheel by means of an adjustable tongue or its equivalent so that the maximum distance between the wheel periphery and tongue or end of peripheral band at the top of opening shall not exceed ¼″.

Exhaust Piping

Purpose:

(a) To connect the exhaust hood to the source of suction.

(b) To ensure adequate air velocity for the pneumatic transport of the collected material to the separator.

Transporting Velocity:

1. Vapors and gases mix intimately with the air and may be moved as air may at any convenient velocity, which is determined by economy of pipe sizes and power consumption.

2. Solid particles require certain minimum air velocities which vary with the size, shape and density of the material. The required velocity is higher for vertical lift than for horizontal movement.

The vertical velocity of an air stream necessary to keep a large particle (greater than 0.2 m.m.) from falling is given by the approximate relationship:

$$V_v = K\sqrt{\frac{PS}{d}} \qquad \ldots\ldots\ldots\ldots \quad (1)$$

Where V_v = vertical velocity, f.p.m.
P = particle diameter, feet
S = specific gravity of the material
d = air density in lbs./cu. ft.
K = constant which is 3200 for average shaped particles.

Actual transport velocities must be higher than the values given by this equation since it is desired to lift the particle, not simply arrest it. Dalla Valle's equation

$$V_v = 54{,}700\left(\frac{S}{S+1}\right)P^{0.57} \qquad \ldots\ldots\ldots \quad (2)$$

gives lifting velocities approximately 50% higher than the terminal speeds given by equation 1.

For horizontal transport according to Dalla Valle:

$$V_h = 16{,}000\left(\frac{S}{S+1}\right)P^{0.4} \qquad \ldots\ldots\ldots \quad (3)$$

where V_h = horizontal air velocity, f.p.m.
S = specific gravity of the material
P = dia. of largest particle to be moved, in feet

$$V_v = 13{,}300\left(\frac{S}{S+1}\right)P^{0.57} \qquad \ldots\ldots\ldots \quad (4)$$

$$V_h = 6{,}000\left(\frac{S}{S+1}\right)P^{0.4} \qquad \ldots\ldots\ldots \quad (5)$$

In equations (4) and (5) "P," the dia. of largest particle to be moved, is expressed in inches.

Velocities determined from these formula should be increased by at least 25% since they represent the minimum at which the stated size and density of a material can be transported.

Example: Granular material, the largest size of which is approximately 0.37 in. in dia. with a S.G. of 1.40, is to be conveyed in a vertical pipe the velocity of the air in which is 4,100 f.p.m. Find whether the material can be transported at this velocity.

$$V = 1.25 \times 13{,}300 \times 1.4/2.4 \times 0.37^{0.57}$$

anti-log. $(0.57 \times \log 0.37)$—

$$= 0.568.$$

Therefore the required velocity = 5,500 f.p.m. Hence the duct velocity must be increased by speeding up the fan or decreasing the dia. of duct or both.

The matter of correct air velocity is a most important factor in the successful and economical operation of the plant.

Sufficient velocity must be developed to convey the material, but any excess of velocity entails unnecessary waste in power consumption.

In any pipe system the horse-power required varies as the cube of the velocity; i.e., twice the velocity requires eight times the power, whilst halving the velocity calls for one one-eighth of the power.

Exhaust piping should be constructed of metal not less than the following gauge:—

8 inches diameter or less	24 gauge
9-20 inches diameter	22 gauge
21-30 inches diameter	20 gauge
30 inches diameter and over	18 gauge

Every bend, turn or elbow shall be made with a radius in the centre line at least equal to 1½ times the diameter of pipe to which it is connected. A radius of twice the diameter shall be used where space permits.

The main suction pipe should preferably receive only one branch in a section of uniform area wherever space permits, and in no case shall more than two branches go into such a section. The area of the main pipe should be the sum of the areas of the branch pipes.

If the material being conveyed has a marked abrasive or wearing characteristic a heavier gauge metal than that specified in the table should be used at all joints where direction of air flow changes.

Method of Proportioning Pipe Sizes

The area at any section should not exceed Q/V where "Q" is the volume of air flowing past the section and "V" is the minimum air velocity required for pneumatic carrying of the dust.

The size of connections for grinding and buffing wheels should be in conformity with the dimensions listed in Table 1.

TABLE 1.

EMERY OR OTHER GRINDING WHEELS.

Dia. of wheel	Max. grinding surface	Min. dia. of pipe
6″ or less not over 1″ thick	19 sq. ins.	3″
8″ to 9″ not over 1½″ thick	43 ,, ,,	3½″
10″ to 16″ not over 2″ thick	101 ,, ,,	4″
17″ to 19″ not over 3″ thick	180 ,, ,,	4½″
20″ to 24″ not over 4″ thick	302 ,, ,,	5″
25″ to 30″ not over 5″ thick	472 ,, ,,	6″

BUFFING, POLISHING OR RAG WHEELS.

Dia. of wheel	Max. buffing surface	Min. dia. of pipe
6″ or less not over 1″ thick	19 sq. ins.	3½″
7″ to 12″ not over 1½″ thick	57 ,, ,,	4″
13″ to 16″ not over 2″ thick	101 ,, ,,	4½″
17″ to 20″ not over 3″ thick	189 ,, ,,	5″
21″ to 27″ not over 4″ thick	338 ,, ,,	6″
27″ to 33″ not over 5″ thick	518 ,, ,,	7″

A modification of the above requirements is allowable in the case of narrow wheels used for light work where very little dust is generated and where a small pipe will satisfactorily remove it.

These requirements do not apply to swing frame and portable grinding machines.

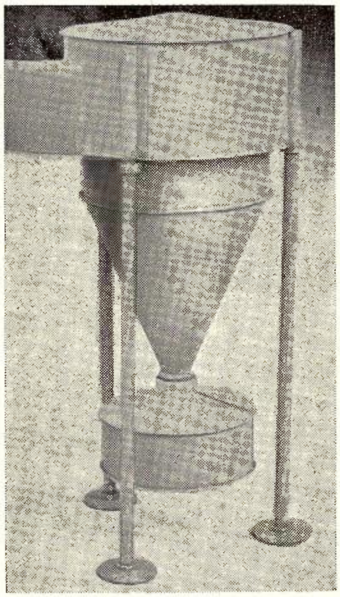

Fig. 1.—A Typical Cyclone Separator.

The Separator

The most common method of separating dust and other materials from the air is to pass the mixture through a centrifugal "cyclone" collector. In this type of collector the mixture of air and material is introduced on a tangent near the cylindrical top of the collector and the whirling motion sets up a centrifugal action causing the comparatively heavy materials suspended in the air to be thrown against the side of the separator, from which position they spiral down to the tail piece while the air escapes through the stack at the centre of the collector.

A "cyclone" type separator of suitable size for the application of individual exhaust systems to grinders, buffs, finishers, lappers, circular saws, universal or swing frame grinders, etc., in the Sydney Workshops has been developed to give a 95% collection efficiency.

The size of the cyclone is governed by the diameter of the outlet stack which must be sufficient to reduce the velocity below that calculated by equation (1). A typical cyclone separator is shown in Figs. 1 and 2.

Stokes' law forms the basis for design of the centrifugal type separator.

$$V_p = \frac{R\ W^2\ d\ p^2}{k\ n} = \frac{V_a^2\ d\ p^2}{K\ n\ R}$$

$$\text{and } p = \sqrt{\frac{k\ h\ Y\ R}{d\ A\ V_a}}$$

where V_p = settling velocity of the particle, f.p.s.

R = radius of curvature of the air stream, feet

W = angular velocity of the air stream, radians/sec.

d = density of particle in English units

p = diameter of smallest particle to be removed, in feet

K = 36 and is a constant

n = viscosity of gas in English units

V_a = linear air velocity in the cyclone, f.p.s.

Y = max. radial distance a particle must travel in the cyclone to reach the wall, feet

A = angular distance of travel of the air from the entrance to the outlet of the cyclone, radians.

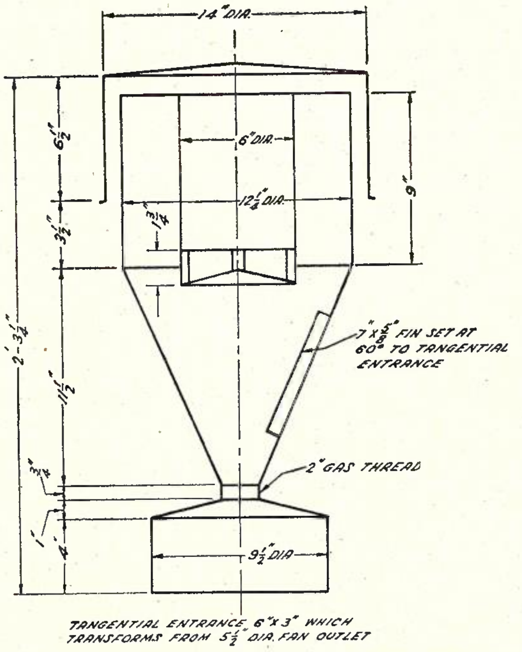

Fig. 2.—Details of a Cyclone Separator.

Pressure Losses

In order to push or pull air along a duct, pressure is required. The required pressure depends on the air velocity and on the system. This pressure is generally referred to as inches of water gauge and is measured with a "U" tube gauge filled with water, the difference in water level of the two legs of the gauge measured in inches gives the pressure.

Static pressure (S.W.G.) represents the compression pressure or the pressure tending to burst the pipe.

Velocity pressure represents the kinetic energy of the blast or the pressure due to the velocity.

The maintained pressure at the fan is the sum of three constituents:

(a) Pressure loss at the hood.
(b) Friction loss in the pipe.
(c) Collector or separator loss.

(a) Pressure loss at the hood is determined by the formula:

$$H_a \text{ (ins. water)} = \left(\frac{1 - f^2}{f^2}\right) V\,P.$$

where f = coefficient of restriction
V P = velocity pressure in the connecting pipe, ins. water.
Average values for f and H_a are given in Table 2.

TABLE 2.

Type of opening	f	H_a
Flanged gradual opening	0.95	0.11 V P
Average hood	0.70	1.0 V P
Enclosing hood, opening = throat area	0.50	3.0 V P

$$\text{Velocity pressure in inches of water} = \left(\frac{\text{velocity in the pipe}}{4000}\right)^2$$

(b) Friction loss in a round pipe of average surface is determined by the following general equation:

$$H_b = \frac{L}{57\ D^{1\cdot35}} \left(\frac{V}{4005}\right)^{1\cdot85} \frac{ad}{0.75}$$

where H_b = pressure loss in the pipe, ins. water

L = length of pipe in feet

V = air velocity, f.p.m.

D = pipe diameter, feet

ad = air density, lbs. cu. ft.

Miscellaneous losses introduced by bends and connections must also be taken into account.

Where R = radius on the centre line of the bend and D = diameter of pipe the loss in a bend of the pipe is given by the Table 3.

TABLE 3.

R/D	H_b in % V P
2.0	14.5
1.5	17
1.0	26
0.75	38
0.5	74

Connections to the main pipe should always incline in the direction of air flow and the loss due to the connection is as set out in Table 4.

TABLE 4.

Angle of connection to main pipe	H_b in % V P
15°	9
30°	17
45°	22
60°	44

(c) Collector or separator loss is calculated from the formula:

$$H_c = 0.13\ (V/1000)^2$$

where H_c = pressure drop through the cyclone, ins. of water.

V = air velocity in the fan discharge duct, f.p.m.

Total loss in system or pressure required at the fan = $H_a + H_b + H_c$.

Conclusion

Having determined the volume (volume equals the product of velocity and the area of the main pipe), look up the fan performance from manufacturers' tables and choose a fan to meet the required conditions. Speed and horse-power are determined from the tables. As a rule there are two or three sizes of fans which will do the work and the larger fan is apt to be most efficient. This can be determined by an inspection of the tables. Where economy of power is essential a large fan should be used, but where low first cost is the prime requisite a smaller (and less economical) fan may be installed. Special care should be taken to see that the fan chosen is suitable for the material handled. The inlet to the fan should be at least equal to the pipe leading into it.

To ensure proper operation all pipes, elbows, hoods and connections should be lap jointed, thoroughly riveted, and soldered in both circular and longitudinal joints. All hoods should be sufficiently heavy for the work to be performed, but in no case less than 22 Birmingham gauge. Their edges should be folded in, not only to give the necessary stiffness, but also to prevent danger to the operator which is entirely possible by a raw edge. The construction of all hoods should be such that the cutter or wheel enclosed may be readily removed or adjusted. Where heavy construction is required, cast-iron hoods are frequently used. Such hoods are expensive and cumbersome and require special patterns, although when these hoods are fitted as protection hoods, it is often economical to adapt them for exhaust hoods. By building new hoods of reasonably heavy steel plate stiffened with angle irons better protection can be obtained.

Emery wheels and buffing wheels should be handled by separate systems because of the fire hazard, as it is possible for sparks from the emery wheel to ignite the lint and dust from the buffing wheels when both are carried through the same system. The development of static electricity requires the system to be earthed. The efficiency of an exhaust system depends upon its effectiveness in reducing the concentration of dusts, fumes, vapors and gases below safe limits. Too much emphasis cannot be placed on the necessity of testing exhaust systems frequently, by determining the concentration of atmospheric contamination at the workers' breathing level.

AERIAL LINE CONSTRUCTION

A. S. Bundle

Part 7—Transpositions (continued)

Erection of Transpositions

Double Spindle.—Special precautions are necessary in the erection of this type of transposition, for reasons given in this paragraph. The double spindle fitting (illustrated in Fig. 76) is designed to hold the wires separated by a vertical distance of 6¾ ins. at the transposition pole. Both wires are attached to insulators above the crossarm and, as the fitting is secured to the crossarm, the upper arm of the spindle exerts a greater turning moment than the lower arm thereby tending to cause canting, particularly at angles. This canting is aggravated if the arm shrinks and loosens the securing bolt, or, in the case of crossarms made from soft timbers, if the shoulder beds into the timber. There is also a tendency for the lower wire to foul the upper arm of the spindle.

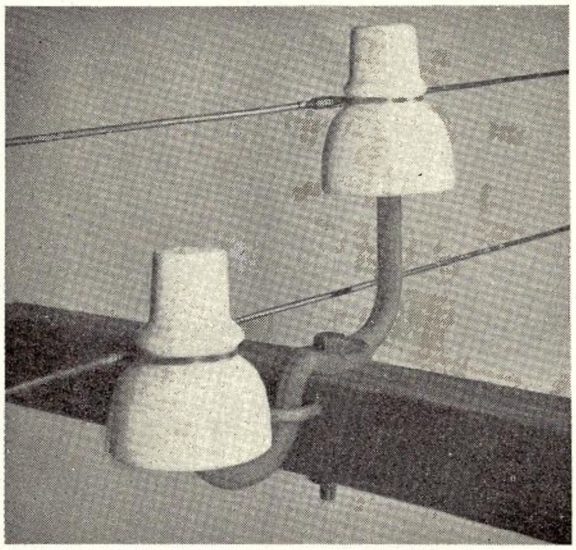

Fig. 76.—Double Spindle Fitting.

The wires would normally cross at the transposition pole if the spans on each side were of equal length, but this would bring the wire attached to the low insulator very close to the spindle arm carrying the high insulator. This may cause the wire to foul the upper spindle arm if the latter has a tendency to cant over to the right which is the case at angles where the wires deflect to the right (looking from the low to the high insulator). The lower spindle arm is, therefore, given an offset of ½ in. to increase the clearance, thereby bringing the crossing point normally to about 6 ft. from the pole on the same side as the low insulator. However, with any loosening of the supporting bolt due to shrinking of the cross arm the spindle will twist and the effect of the offset will be lost. It is necessary, therefore, to prevent this by affixing a coach screw, or preferably a hook bolt, which will prevent the lower arm from turning out of position. A hook bolt not only does this but also tends to prevent the upper arm from canting at angles. See Fig. 77.

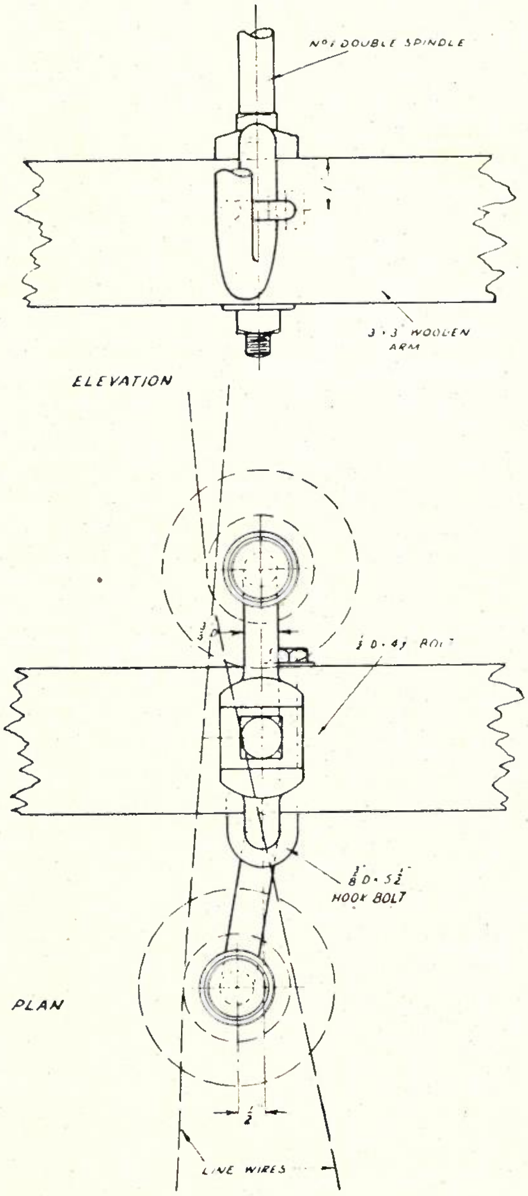

Fig. 77.—Fitting of Double Pole Spindles.

When running out wires to be transposed with double spindle fittings, the two wires are rotated 180 degs. in a clockwise direction at the transposition pole. On straight runs the fitting is placed with the lower spindle arm nearest the capital city, but at angles this arm is fitted on the country side.

To prevent the lower wire fouling the upper

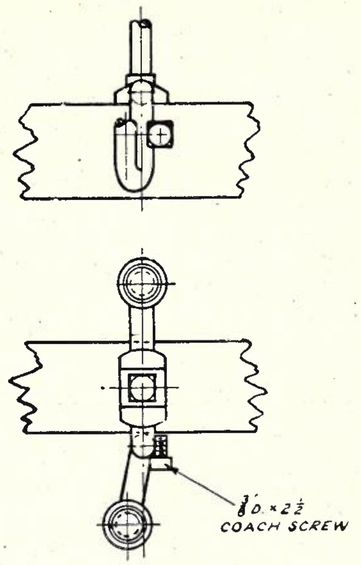

Fig. 77A.—Alternative Method for Holding Double Spindle.

arm of the spindle at angles, special methods are adopted as illustrated in Fig. 78. The need to take a complete turn of the line wire around the insulator is regarded as a weakness of this type of transposition, not only because it provides a point for the wires to chafe but because it is also difficult to execute and is liable to cause additional canting.

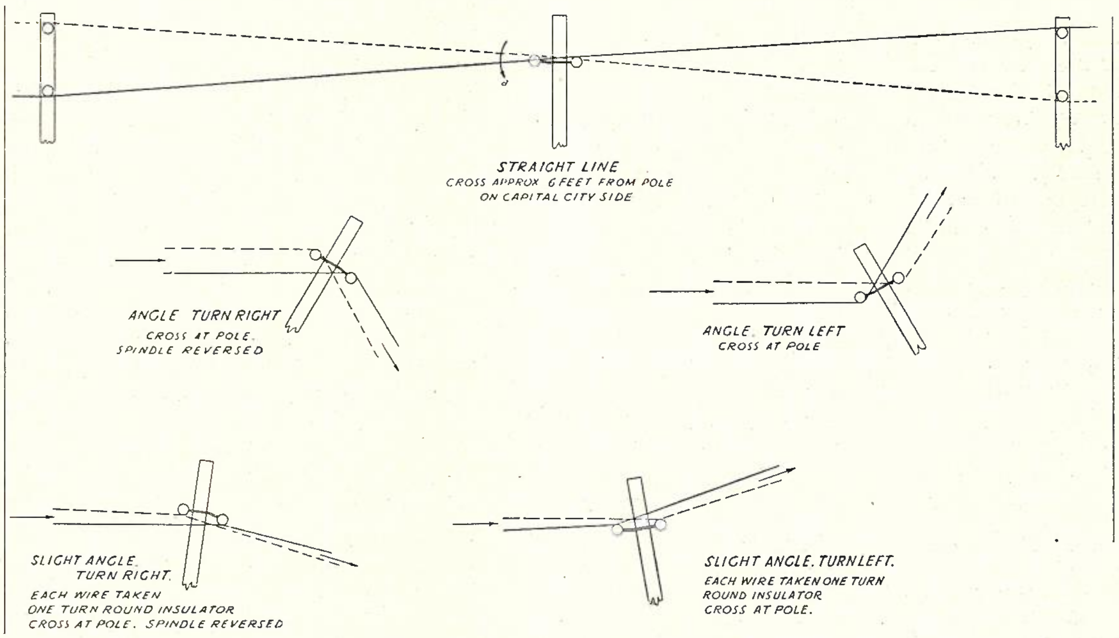

Fig. 78.—Wire Positions for Double Spindle Transpositions.

Formed Bars. — The construction of formed-bar-type transpositions is comparatively simple provided that the workman is furnished with a proper diagram in a form suitable for convenient reference whilst working up the pole. Full-size drawings are difficult to use and a reduced size is advisable and may, with advantage be pasted to a stiff card or board. It is not advisable to rely upon memory, as different combiner positions and pin-spacings call for different methods of attaching the formed bars, as shown in Fig. 79. It has been necessary to introduce these additional methods so as to obtain satisfactory clearance between the formed bars and the combiners, following upon the change-over to carrier-spaced arms (i.e., wire spacings of 9 ins.-19 ins.-9 ins. between wires on either side of the arm), which has justified a change of combiner positions from 30 ins. to 33 ins. from the centre of the arm. As some of the arms on a pole may be bored for 14 ins. wire spacing and others for 9 ins.-19 ins.-9 ins. in practice four different conditions may arise from the transposing of wires at the two different wire spacings and the two possible combiner positions. Fig. 79 shows only the arrangements for attaching formed bars to obtain best clearance from combiners spaced 30 ins. from the centre of the arm with wires spaced 9 ins.-19 ins.-9 ins. As all conditions are provided for in official drawings space has been taken to show only the most likely conditions on new construction.

The operations involved in fitting are:—

1. Assembly of transposition bands and spindles to the arm.
2. Running of wires and terminating on the insulators, making the usual termination and a drip point 2½ ins. long.
3. Fitting the lower formed bars and finishing with those that cross on the top. Each bar should be shaped and both ends terminated

completely (except for soldering) before proceeding with the fitting of the next bar.

4. The final stage is to carefully solder the connection at each drip point, ensuring that the solder runs thoroughly in between the wires.

Method Z allows the formed bar to make connection out at the drip point by means of a specially formed bar. The method of wrapping is similar to X but the finishing turns are made off along the lower horizontal section of the bar to facilitate soldering.

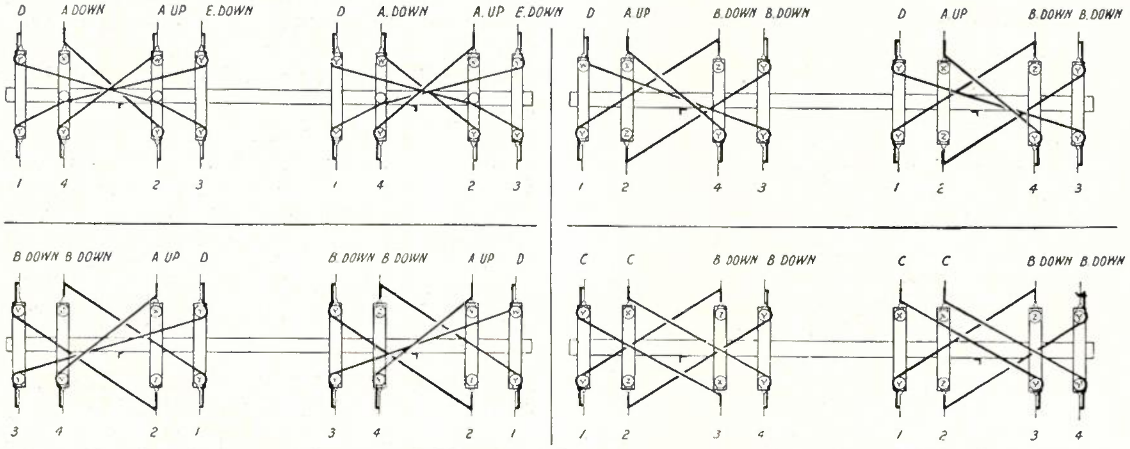

Fig. 79.—Layout of Formed-bar Phantom Transpositions erected on 9 ins.-19 ins.-9 ins. arms with combiners spaced 30 ins. from centre of arm. Note: The numbers indicate the order in which the bars should be fitted.

Four methods (designated W, X, Y and Z) are set out for attaching the ends of the formed bars to the insulators and line wires. The four types are provided to obtain the necessary clearness between formed bars, combiners and insulators. These methods are illustrated in Fig. 80.

Method W permits the wire to be attached to the near side of the insulator and connect to the line wire at the lower end of the drip point. The binding wire is folded in half and slipped over the neck of the line wire termination; the formed bar is then bound in against the line wire with 5½ turns. The doubled wire is then passed around the insulator and made off with 5 turns (of the doubled wire) on the formed bar. The formed bar is then bent outwards from the first-mentioned binding and shaped to connect to the drip point about ¾ in. from the end. This connection is bound around neatly with 10 turns of binding wire and then soldered.

Method Y is similar but permits of the formed bar passing round the back of the insulator. The method of making is the same as with W except for the somewhat sharper bend in the formed bar.

Method X brings the formed bar clear of the insulator and connects instead at the neck of the line wire termination. The binding wire is folded in half and slipped under one of the wires at the neck of the termination and each end of the binding wire is taken over the line to form 1½ turns and the two ends are taken under the formed bar which is then wrapped to the termination with 5 horizontal and 5 vertical turns and finished off with 5 close double turns at the bottom of the drip point.

A specially shaped soldering iron is available to linemen which enables the soldering to be done very readily. (Fig. 81.) The drip point connections at W, X and Y are soldered by inserting them in the cavity provided on the projecting hump of the iron while the connection at Z is soldered by heating in the corner formed by the shoulder on this iron.

Plate Type.—One of the important features of this type of transposition is the reduction of the number of joints and it is, therefore, important to see that the transposition is made in the wires as they are run out. Depending upon the circumstances the wires may, as indicated in an earlier section of this series, be run out:—

(a) Along the ground, in which case the wires may be run round pegs driven into the ground to hold the wires apart, and then attached to a template which holds the crossover in position while the wires are being lifted on to the arms.

(b) By threading over the arms, in which case the wires must be given a 180 deg. twist in a clockwise direction at each transposition pole for physical transpositions. The twist can be retained in position by making use of the spindles on the poles at either side of the transposition pole so as to keep the wires apart at these two poles. (If steel spindles are in use they should be wrapped in hessian to prevent the copper wire chafing on the steel). In the case of phantom transpositions a similar method of working can be used but special care is advisable to see that the wire which crosses at the lowest level is run first and so on, finishing with the wire which occupies the highest level

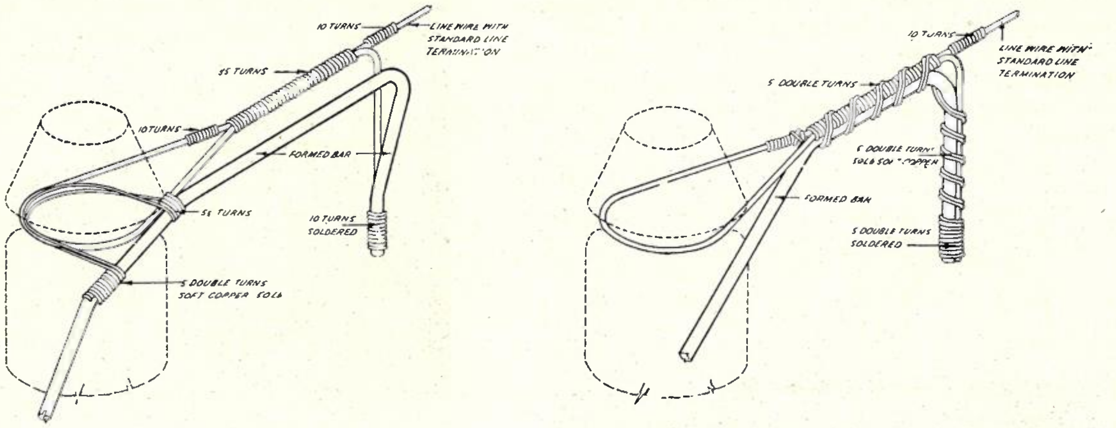

METHOD OF TYING AT W

METHOD OF TYING AT X

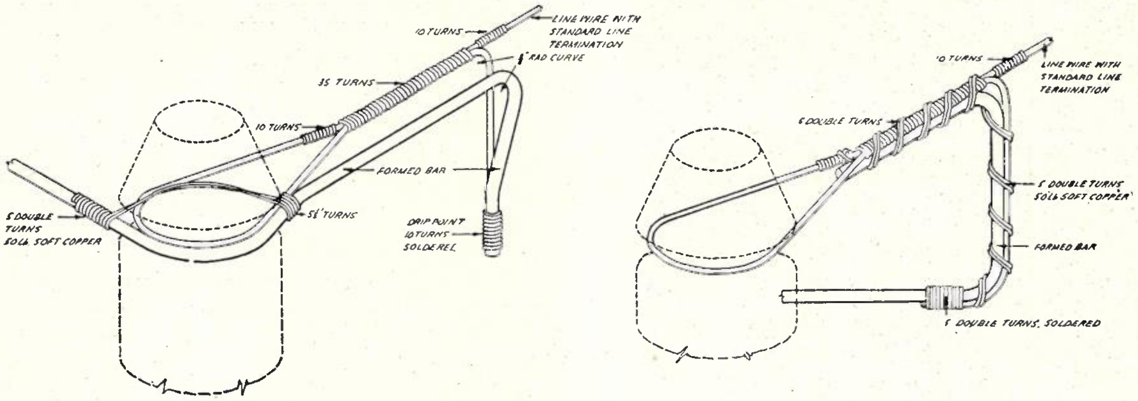

METHOD OF TYING AT Y

METHOD OF TYING AT Z

Fig. 80.—Terminations for Formed Bars.

on the transpositions. The rule is to run out in turn the wires occupying pins 1, 2, 4, 3 counting from left to right except for type 3 where the counting is right to left.

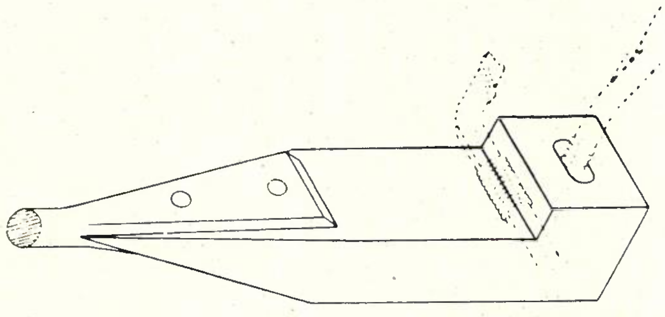

Fig. 81.—Lineman's Soldering Iron.

The precaution of using pegs and a template as mentioned in (a) above is not really necessary for physical transpositions, but is very useful when running out a group of four wires which are to be phantom-transposed. It is difficult to maintain the crossing in the wires and prevent confusion unless some such device is used. The template can also be used as a guide to how the wires should cross. A different template is needed for each phantom transposition type. The template can be readily made up from pieces of 3-in. by 1-in. timber and a series of fibre discs, some of which are grooved to take the wires and some plain to act as spacers. Figs. 82 and 83 show such a template in use.

Wires close to full tension cannot be drawn round the insulators on the transposition plate, owing to the sharpness of the angles and the friction between wires and insulators. The only satisfactory method is to make each such transposition a tensioning point. The wires are pulled up in wire grips at the transposition and held thus until the tension is taken with another set of wire grips at the next transposition point. In this way at least 4 wire grips are required for erecting each pair of wires. It may be advisable to loosely tie the wire to the insulators at the transposition so that when the wires are pulled up from the next point ahead they will definitely fit into the insulator grooves without having need for a man to be in position to guide them.

When running out one wire to pair up with an existing wire or a pair of wires to form a phantom group with an existing pair, it is important to arrange the work so that there will be as few joints in the finished circuit or circuits as possible. It is also advisable to ensure that new wire passes round the insulators, and not old wire. Moreover, the joints should not be too close to the insulator, a desirable distance being 1 ft. 6 ins. to 2 ft. These objects can be achieved by leaving a loop in the new wire (held with wire grips) at each transposition pole. This loop should be of such length that when the wire is cut each end will pass round its two insulators on the transposition plate and be long enough to cut into the existing wire at least 1 ft. 6 ins. beyond the second insulator. In this way only two joints are required per physical transposition or 4 per phantom transposition.

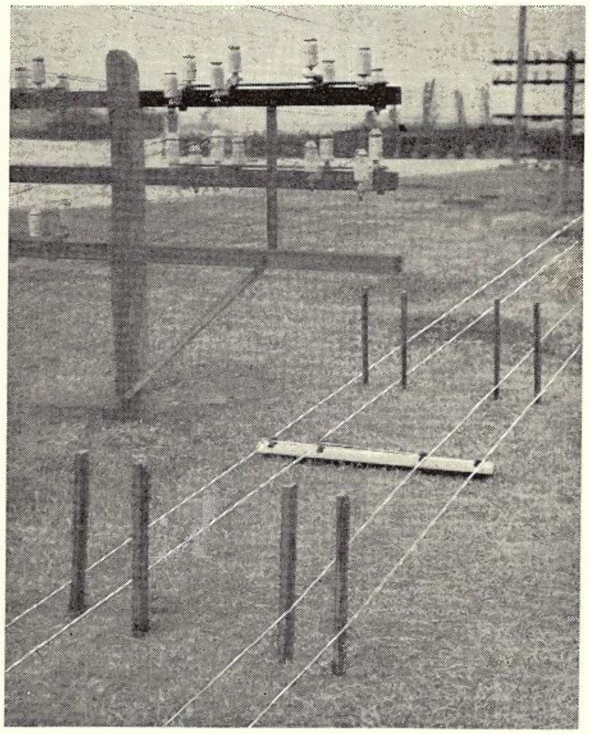

Fig. 82.—Stakes and Templates in Use for Erecting Wires which are to be Phantom-Transposed.

If the transposition is to be cut into an existing pair of wires, four joints are necessary to provide the additional length of wire required. A new piece of wire should be cut into each existing wire and the length of each new piece should be sufficient to permit the new wire to pass round its two insulators and cut into the existing wires at points at least 1 ft. 6 ins. on each side of the transposition. To make a neat and workmanlike finish each sleeve should be exactly the same distance out from its insulator.

All H.D.C. and cadmium copper wires should be taped where they pass round insulators, and this applies also at plate type transpositions, although it is not regarded as necessary always to *bind* the wires to the insulators.

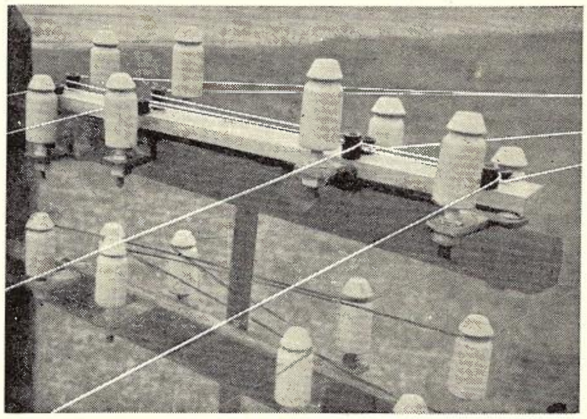

Fig. 83.—Template with Wires Fitted on to Arms.

SECTION 8—STABILITY OF POLE ROUTES

This Section covers:—

Purpose of Anchoring.
Setting of Poles in the Ground.
Use of Foot Plates or Blocks.
Staying.
Strutting.
Special Structures.

Purpose of Anchoring

An open-wire telephone route consists essentially of wires supported by poles which are set in the ground. It is a fundamental requirement that the supports shall, under the severest conditions of loading, be stable enough to hold the wires clear of interference from:—

(a) Objects, animals or persons moving on the ground.
(b) Neighbouring structures or trees.

The wires should also be uniformly separated from one another throughout their length. Previous sections of this series have dealt both with the strength of poles and with the sags and tensions of wires necessary to prevent contacting. It is the purpose of this section to review the methods adopted for anchoring these poles so as to obtain the necessary stability to maintain the required sags in the wires under all conditions of loading.

A pole route depends chiefly for its stability upon the strength of the poles and their setting in the ground. If each pole is made strong enough and is set firmly enough in the ground to withstand the loads which may be impressed upon it, then the route will have the necessary stability. With regular pole construction this is not usually economically practicable and additional anchorage is provided at various points along the route, for purposes outlined in the paragraphs immediately following:—

Static Loads.—It is usually convenient to adopt a uniform standard of pole and fittings as well as a uniform depth of setting in relation to pole length, but there are certain critical points along a route where additional strength is necessary. These critical points are principally:—

(a) Terminal points.
(b) Angles.
(c) Break-off points.
(d) Special anchoring points where the wires are terminated, such as at railway crossings.

At these points, forces due to the tension of the wires are applied to the poles. These loads may be described as static because they are fairly constant, although, of course, subject to gradual variation because of the change of temperature of the wires and also increasing when additional wires are erected. It is at the points where such static loads occur that the stability of the route depends. These poles must, therefore, be sufficiently stable to counteract the load without any appreciable deflection in the direction of the resultant force and so cause slackening of the wires. This stability may be achieved by such means as:—

(a) Use of heavier poles set more securely in the ground.
(b) Use of stays connected near to the tops of poles of normal strength.
(c) Use of struts on poles of normal strength.
(d) Use a special structure such as:—
    (i) A pole;
    (ii) H pole;
    (iii) Tower.

The stability of these critical poles must not only be sufficient to prevent collapse, but must also prevent any tendency in the pole to creep over at the head in the direction of the load. This is a very important aspect in the stability of the route, and is also the most difficult to obtain. The effect is an insidious slackening of the wires which occurs very gradually when the ground gives slightly under the effects of weather and other occasional applications of heavy loads. The effect is increased when additional wires are erected.

The static loads referred to may be very considerable. Take as an example, a route with five arms each carrying eight hard drawn copper wires averaging 200 lb. per mile. The static load at the head of a terminal pole at minimum temperature would be of the order of 10,400 lb. (about 4.64 tons). At a pole where the wires subtend a horizontal angle of 150 deg. the load would be 5,383 lb. (about 2.4 tons) while if the angle were 135 deg. the load would be 7,960 lb. (about 3.55 tons). The example quoted is not particularly abnormal, and, on quite a number of routes, the load would be approximately twice the figures quoted. The provision of single poles and dependence upon their setting in the ground to take such loads would not usually be economical because of the extreme size of the poles and the problem of ensuring adequate strength of setting. The use of normal sized poles stayed at the head or strutted is, therefore, usually cheaper.

Dynamic Loads. — In addition to the static loads mentioned, certain dynamic forces may also be applied to the poles. Principal of these is the lateral force due to wind pressure on the wires. This is usually the greatest force which the ordinary straight line pole may have to withstand. Largely because of the convenience of having a limited number of strength ranges for standard poles, it is frequently necessary to provide additional lateral support at regular intervals to give the route sufficient strength to withstand the wind pressure. In such cases, the intermediate poles between those specially anchored would be partially supported by the line wires themselves.

Marching Poles.—In some areas, the whole of the poles in a route will lean over in a direction along the line of the wires. This is either due to greater tension on the line wires at one end of the section than at the other end, or because of some charcteristic of the soil which permits the poles to move over. This effect is referred to as "marching" and to overcome it some additional anchorage along the line of the route is provided at regular intervals.

Complete Line Failures.—Another factor is the strength necessary along the line of the wires in the event of the line wires being broken by falling trees or similar causes. In such instances the full tension of the line wires is applied to the poles on either side of the break, and these may snap off or pull out of the ground and the load will then be applied to the next poles and so on, so that a sequence of poles may collapse or be pulled over before a pole is reached which will withstand the loads. In this way, a fairly long section of route may be damaged with resultant heavy cost of repairs and lengthy delay in effecting restoration of the service. Here again, extra anchoring along the line of the wires is called for at regular intervals. The extent of this anchoring will be governed by consideration of the following:—

(a) The hazard of such failures.
(b) The cost of removal of the hazard compared with cost and necessity for additional anchoring.
(c) The importance of the circuits on the route and the effect of such interruption.
(d) The cost of effecting repairs.
(e) The length of interval between such anchorage points required to prevent likelihood of extensive damage having regard to:—
    (i) The proximity and number of trees or other hazards along the route.
    (ii) Longitudinal strength of the poles.

Setting of Poles

The stability of a pole that is set in the ground depends upon:—

(a) Depth of setting.
(b) Area of pole butt bearing against the soil.
(c) The type of soil; and—

(d) The use of blocks or plates or other methods of increasing the effective bearing area on the soil.

The variable nature of soils, both in kind and behaviour, under wet and dry conditions, make impossible any precise calculation of the strength of setting of a pole. Filled-in soil is very much softer than virgin soil of similar type even though it be well rammed. The degree of stability of a pole will depend greatly upon the amount of filled-in soil in the hole, and this will affect principally the tendency of the pole to creep over at head in the direction of any static load that may be applied there.

Some idea at the rupture intensity of the soil which would permit complete uprooting of the pole may be obtained by the assumption that the pressure of the earth is proportionate to the depth. On this basis it can be shown that the moment of resistance M is given by—

$$M = (D\,h^3\,k)/10 \quad \ldots\ldots \quad 25$$

where D = average diameter of pole butt (taper is neglected).
h = depth of setting.
k = a constant due to the nature of the soil. This varies from 8,000 lb. to 2,000 lb. per sq. ft. per foot of depth, the latter figure usually being taken for safety or 3,000 for good firm soil.

Setting the Pole.—Formula 25 applies only to the rupture intensity of the soil when uprooting occurs and not to the initial creeping of the pole such as is likely when there is a static load on the pole. To a large extent the stability of a pole, with a static load applied to it, depends upon the care with which it is set. One fundamental is to leave as much of the virgin soil undisturbed as possible. It is, of course, impossible to have a perfect fitting hole in virgin soil for a pole, and some re-filling is necessary, and this requires that there must be sufficient room for a ramming tool. The stepped hole is frequently necessary, too, to assist in the erection of the pole.

Taking account of the factors set out above, we find:—

(a) The hole should be carefully dug so that the pole will both be in its correct alignment and will bear against virgin soil on the side toward which the load is directed;

(b) If the hole is of the stepped type, the hole should be dug in such direction that best use is made of the virgin soil. Thus, in the case of an intermediate pole in a straight section of route, the principal load to be considered is a lateral one due to wind pressure and the hole should be set lengthwise along the route and the sides of the hole will then provide support against wind loads in either lateral direction;

(c) With the side of the pole bearing as much as possible against virgin soil on the side in the direction of the load, the butt must be prevented from kicking out by very careful ramming, and also by dropping stones and rocks, etc., into the bottom of the hole to wedge between the virgin soil and the side of the pole;

(d) The filling-in should be done slowly, permitting ample ramming between each shovelful of soil. Good practice is to use three men ramming while one man is shovelling.

Concreting.—From the viewpoint of stability, the best method of setting a pole, and particularly one to which a static load is applied, is to set the pole in the centre of the hole and fill the space between the pole and the sides of the hole with concrete. This, howver, involves both the supply and mixing of concrete as well as supporting the pole until the concrete is set. A recommended mixture is 1 : 2.5 : 5, by weight of cement, sand and stone respectively. The mixture should be made rather thin and poured into the hole and should not be tamped after pouring. To reduce corrosion or decay in poles which are concreted, the concrete is built up above ground level with a slight slope away from the pole, so that water falling down the side of the pole will run off and not accumulate there.

The strength of the setting of a pole can be increased by making the diameter of hole larger, and increasing the quantity of concrete which, by acting as a collar about the pole butt, has the effect of increasing its diameter and, of course. its bearing area against the soil.

INFORMATION SECTION

TOPPING UP WATER FOR SECONDARY BATTERIES

While the use of distilled water for topping up secondary cells to replace that lost by evaporation is theoretically ideal, the cost of such water is not economically justified where a satisfactory substitute is available. It has been found, as a result of experiment, that, of the impurities usually found in domestic tap water, only chlorine and iron occur in sufficient quantities to merit consideration as far as the working of the cells are concerned, and of these the most likely impurity to be found in excess is chlorine.

As a result of the tests, and information available from other countries where extensive use is made of accumulator cells, it has been decided to authorise the use of tap water for topping up if the water supply authorities' report of analysis states that the quantity of the following impurities in the water does not exceed the figures in Table 1.

TABLE 1

Type of Cell	Impurity	Parts per million
Enclosed, single or multi-cell type, with pasted positive plates	Iron	5.0
	Chlorine	100
Open type with Planté positive plates	Iron	5.0
	Chlorine	25

The reason for permitting a greater percentage of impurity in the enclosed type cells with pasted plates is that the evaporation is considerably less in an enclosed type of cell, and the life of pasted plates is less than that of the Planté type.

In using tap water within the limits specified above, the precaution should be taken always of allowing the water to run for a few seconds from the tap used, so as to flush the tap and pipes connected thereto, thus disposing of any water which may have been standing in the pipe for any length of time. The jug used for filling should be rinsed before being used. Water should not be used when discoloured as the result of a disturbance of the pipes by repairs either to the mains or in the building.

In a district where the local water supply is outside the limits above, several alternatives are available, viz.:—

(a) Use a mixture of distilled water and tap water in such a manner that the total amount of impurity used per annum is not greater than the amount which would be used if the water available were just within the specified impurities limits.

(b) Transport suitable water from some other nearby source if such is available.

(c) Arrange for local collection and storage of rain water if tests disclose that water collected in the particular locality is within the specified limits.

(d) Arrange for local distillation of the available supply. In this regard certain stills will be freed for use from districts where the available tap water is suitable, and water was formerly distilled.

The procedure to be adopted in each case will be decided after consideration of the local conditions, and the one of the above methods used which is most economical and practicable.

It is of interest to note that in England, tap water is used extensively in telephone exchange batteries, and in the U.S.A. the major portion of the water used in batteries is tap or well water except in certain locations. The geological formations and climatic conditions found in different parts of Australia vary widely from each other, and consequently the chlorine content in the available water supplies vary greatly, figures as low as 4 parts per million and as high as 800 parts per million being obtained from different reservoirs. Tests taken of rainwater samples collected showed that the chlorine content of such water was influenced greatly by the nearness or distance from the sea or salt lakes, etc. In this regard a sample of rainwater collected at Alice Springs had a chlorine impurity of 3.3 parts per million, while one collected at Port Augusta gave 38 parts per million.—E.J.B.

LIGHT REFLECTOR FOR TEST DESKS

The lighting conditions provided for Test Desks have been recognised for a long time as being inefficient, and many methods have been tried at different times to overcome this difficulty. The efficiency of any new method used can be gauged by the reception it receives from the mechanics required to operate the test desk. The "Shade" to be described herein has been installed at most test desks in the Sydney Metropolitan Area and has been well received by test desk operators.

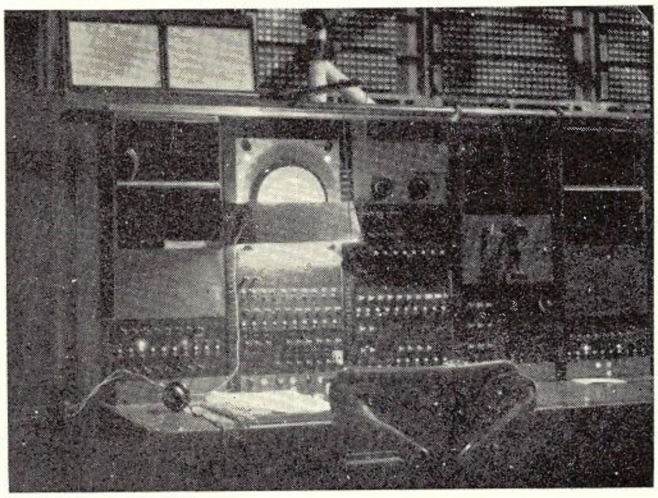

Fig. 1.—Light Reflector on Test Desk.

The introduction of the circuit utilising the test desk voltmeter for testing dials on substation telephones, added to the difficulty as the voltmeter used for this circuit with its "Multiple Scales" called for efficient lighting, especially for the upper scale, which is coloured yellow and used for the "Impulse Ratio Test." One of the methods tried to illuminate this meter was to place two switchboard lamps inside the actual meter casing. The result was that the dial of the meter could be read satisfactorily, but the heat generated by the lamps interfered with the operating mechanism. It was then realised that the source of light should be centred in front of, and below the meter scale.

The shade illustrated in Fig. 1 was then devised and was found to satisfactorily fulfil a threefold requirement:—

(a) Illumination of the meter;
(b) Provision of lighting for the vertical keyboard;
(c) Provision of lighting for the clerical duties associated with testing.

The use of the shade also provides economical lighting as the maximum wattage of the lamps used should not exceed 50 volt 15 watts, as a higher wattage lamp provides too much light and allows excessive contrast between the lighting of the test desk and the general lighting surrounding the desk. This excessive contrast should be avoided as it is damaging to the eyesight. At one exchange 15 watt daylight lamps were provided and the effect was most pleasing. The 15 watt lamp provides 12 foot candles of light at desk level, which is ample for all needs.

The shade is manufactured from 22 S.W.G. mild steel sheet; the inner surface is finished matt white and the outer surface is finished black enamel. The fitting of the shade is very simple. Turned over shoulders provide for the shade to be held by the stile strips of the kep panel. The shade will fit either old or new type desks. With the older type, the panel width is 10⅜ ins., the newer type being 10 ins. in width. The unit is designed to fit the 10 in. panel, but the ends may be splayed to fit the 10⅜ in. panel.

—S.J.D.

INTERMEDIATE REPEATER FOR LONG P.A.B.X. AND P.B.X. EXTENSION LINES

A simplified repeater for long extension lines has been developed recently. The circuits have been designed to allow repeaters to be installed in any exchange through which the extension lines pass, a position approximately midway between the P.A.B.X. or P.B.X. and the distant extension can usually be selected.

The circuits of the repeaters are indicated in Figs. 1 and 2, and a brief description of the circuits follows:—

Repeater for P.A.B.X. Extensions:—Outgoing Call from the P.A.B.X.: The outgoing ring on the extension line operates relay L in the repeater and contacts L1 and L2 connect continuous ringing current to the extension telephone, relay L falls back after each ringing period. When the extension answers, relay A operates, and in turn operates relay B. Contacts of these relays complete the circuit to the P.A.B.X. Relay A feeds speaking battery to the extension telephone and retard R trips the ring and acts as a holding loop to the P.A.B.X. equipment.

Incoming Call to the P.A.B.X.: When the extension lifts the receiver, a loop is completed and relay A operates. A contact of this relay operates relay B. Contacts A2 and B1 complete the loop to the P.A.B.X. B2 removes the ringing relay L from the line and B3 prepares the circuit of C relay. When the extension commences to dial, on the first break of the dial A relay restores and at A1 completes the circuit of relay C which operates. Contact C1 short circuits the dialling loop to the P.A.B.X. The impulses of the dial are repeated to the P.A.B.X. switches at A2 springs. Relays B and C are slugged and will remain operated during dialling. At the end of the train of impulses relay A will remain operated and relay C will restore. Retard R holds the call to the P.A.B.X. and relay A supplies speaking battery to the extension telephone. When the extension hangs up, relay A restores, opens the loop to the P.A.B.X. and breaks the circuit to relay B which restores.

Repeater for P.B.X. Extensions:—Outgoing Call from

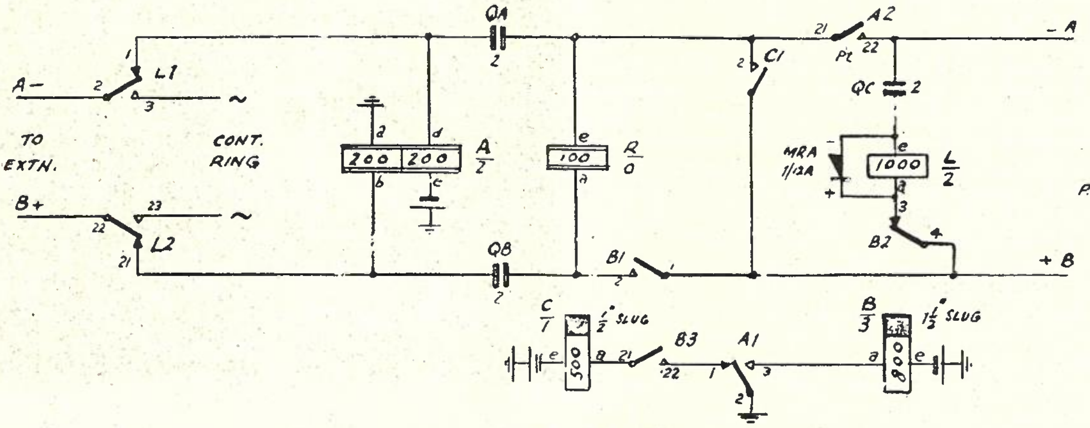

Fig. 1.—P.A.B.X.

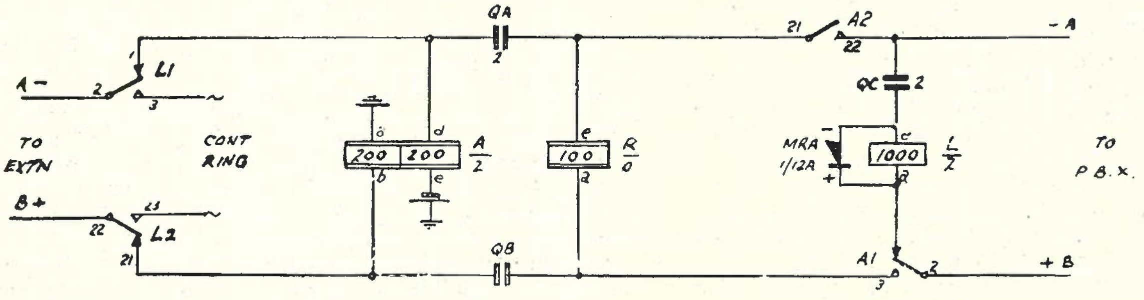

Fig. 2.—P.B.X.

P.B.X.: When the P.B.X. telephonist rings on the extension line, relay L in the repeater operates to the ring and contacts L1 and L2 connect continuous ringing current to the extension telephone. Relay L falls back after the ring ceases. When the extension answers, relay A operates and completes the loop to the P.B.X. by connecting retard R across the line. The circuit to relay L is also opened at A1 contacts. Speaking battery is supplied to the extension via A relay.

Incoming Call to P.B.X.: When the receiver at the extension is lifted, relay A operates and at A2 and A3 completes a loop via retard R to the P.B.X. This operates the extension indicator and, after the connection has been made, controls the supervisory signals. Speaking battery via relay A is fed to the extension telephone. When the call is completed and the extension hangs up, relay A restores and opens the loop to the P.B.X.

—W.K.

SOME NOTES ON MICA

At the present time, as during the course of the last war, many materials attain greater importance and use. This is so in the case of the mineral mica, which on account of its numerous properties is recognised as an indispensible material in many industries. Mica is usually found associated with quartz and felspar, while topaz, beryl and tourmaline may also occur with certain varieties. There are many forms of mica, but the two which attain the most importance on account of their uses are: (a) Muscovite (potassium mica) used in the manufacture of electrical apparatus on account of its resistance and insulating properties and (b) Phlogopite (magnesium mica) used as a heat-resisting medium while utilising at the same time the electrical resistance properties which as a rule do not attain the same standard as the muscovite mica.

The micas are essentially silicates of aluminium with potassium, sodium, lithium, magnesium, ferrous iron, ferric iron and fluorine, while other elements present only in traces are regarded as impurities. The mineral belongs to the monoclinic crystalline system, but its forms approximate to those of the hexagonal system. The following table lists the composition of the two more common types of micas.

TABLE 1

	Muscovite	Stained Muscovite	Phlogopite
SiO_2	45.1	44.8	39.6
Al_2O_3	36.6	33.3	17.0
K_2O	11.8	10.3	9.9
MgO	—	1.0	26.5
FeO	Trace to 3.0		0.5-0.9 replacing Al_2O_3 and MgO
Fe_2O_3		6.1	
F	Trace	0.1	2.25
MnO	—	—	—
Li_2O	—	—	—
H_2O	4.5	4.0	2.99

The varieties of the mineral may be divided into two forms, "normal" and "altered." "Normal" mica consists of clear, stained, streaked and spotted mica. The clear, known as ruby mica, has a hard and brilliant appearance and is the best mica both electrically and mechanically. The stains which occur as inter laminar inclusions in the mineral when it is mined, may vary in colour and composition. Those generally met are yellow, brown and green, due mainly to the presence of iron, although some investigators report that traces of manganese can be present in the mineral. Samples are also found possessing grey stains usually due to the presence of kaolin and clay.

The streaks and spots which are present in numerous varieties of the mineral have important differences. Spots do not always form a continuous conducting path through the mineral, as they are generally found in different layers. The streaks on the other hand form a definite conducting medium. However, in industry, these two defects are normally regarded as having a similar harmful action on the electrical properties of the mineral. There are two more common types of spots usually encountered, namely (a) a black variety, being a compound of iron, i.e., magnetite; and (b) a red variety, also a compound of iron, i.e., goethite.

"Altered" mica is generally calcined or hydrated. This variety often contains moisture between the laminae. Fine cracks have also been detected which render the mica weak, both electrically and mechanically. It is interesting to note that this variety is not as efficient as "normal" mica and is quite unsuitable for use in condensers.

Muscovite mica has the following uses:

Its general use is as an insulating medium in electrical apparatus. High-grade mica of this varilety finds its special use in the manufacture of high frequency material such as valve parts and condensers. In a finely divided condition suspended in oil, the mixture formed affords a good lubricant for varying conditions. It is also used to quite a large extent in the optical industry.

The uses of Phlogopite mica are also varied and some of the more important are as follow:—

Phlogopite mica provides a good heat resisting medium while at the same time it affords reasonably good electrical resisting properties. Being non-inflammable and transparent, it is a suitable material for the manufacture of furnace "peep holes." In finely divided form it is used as an insulating packing, being a non-conductor of heat and also forming a fireproofing medium.

The following table gives some idea regarding the comparative properties of these two extensively used varieties:—

TABLE 2

Test	Muscovite	Phlogopite
Specific Gravity	2.6-3.2	2.6-3.2
Specific Heat	0.207	0.207
Moh's Hardness	2.8-3.2	2.5-3.0
Optical Axial Angle	55°-75°	5°-25°
Electric Strength (1-3 mils)	3000-5000 volts per mil	2000-3500 volts per mil
Power Factor at 40 megacycles	Best quality clear, as low as 0.0001	0.002-0.005
Water of Constitution	4.5%	3%
Maximum Temperature of use	600° C.	850° C.

—W.B.M.

SILICON IMPREGNATION OF FERROUS METALS

The process of silicon impregnation of iron and steel has been undertaken on a commercial basis in Australia. This process, which is also known as "Siliconizing" and "Thrigizing," is somewhat analogous to the process known as "case hardening," but in this case an outer layer is produced on the iron which contains up to about 14% Silicon, whereas case hardening provides a carbon enriched coating.

Briefly the process consists of embedding the iron to be treated in a mass of carborundum (silicon carbide) and/or ferro silicon. This is then heated in a furnace to a temperature of 1700-1850° F. (940-1020° C.), and chlorine gas is then passed into the furnace. The mechanism of the reaction is somewhat uncertain, but it appears that the chlorine liberates the silicon from the embedding material, whereupon the silicon diffuses into the part being treated.

Casings may be produced in thickness ranging from 0.005 to 0.100 inch deep; about two hours treatment is necessary to give a case 0.025-0.030 in. thick on low carbon steel (e.g., mild steel). The case produced can be filed but is not workable with a hacksaw or by normal machining methods. On a base metal having a hardness of about 140 Vickers Pyramid Hardness, a casing having a hardness of 200-280 V.P.H., has been obtained on some experimental samples. The casing has a very nearly uniform composition to at least half its depth, making it possible to grind to finished dimensions without altering the chemical properties of the coating.

The high silicon case is very resistant to nitric, sulphuric and hydrochloric acids, and to temperatures up to 1600° F. Its wear resistance is good, and if heated to 250-300° F. in a heavy oil a considerable amount of oil is taken up by the coat, which then functions as a self-lubricated bearing.

The process can be best carried out on low carbon, low sulphur steels, either in the forged, rolled or cast condition. High carbon, low sulphur steels can also be treated but with more difficulty. High sulphur materials like grey cast iron do not react satisfactorily to the process. Materials to be treated should have any heavy scale or embedded sand particles removed, but light scale or decarburized layers can be allowed to remain. The process shows great possibilities of inhibiting corrosion in situations where heavy iron structures are exposed to severely corrosive conditions.—S.D.C.

ANSWERS TO EXAMINATION PAPERS

The answers to examination papers are not claimed to be thoroughly exhaustive and complete. They are, however, accurate so far as they go and as such might be given by any student capable of securing high marks.

EXAMINATION NO. 2425—MECHANIC, GRADE 2

K. B. Smith, B.Sc.

Q. 1.—(a) Describe the construction and type of voltmeter used on an automatic or C.B. exchange test desk.

(b) With the aid of schematic diagrams, describe the method of testing a subscriber's line for: (i) loop resistance, and (ii) insulation resistance.

A.—(a) A voltmeter used in automatic and C.B. test desks is a dual range moving coil instrument reading 8 or 80 volts full scale. Some of the earlier models read 10 or 100 volts full scale. The meter is usually about 6 in. in diameter, this size being the best from the point of view of ease of reading and space consideration. The meter (see Fig. 1) consists essentially of a fixed horseshoe-shaped permanent magnet in the field of which is pivoted a light framework of aluminium or other non-magnetic material carrying a coil of many turns of fine copper wire. The pole pieces of the magnet are so shaped that, with the help of the soft iron cylindrical core which is situated within the coil they produce a uniform radial field through which the coil rotates.

Under the influence of an electric current a magnetic field is produced by the coil which interacts with the field of the fixed magnet, turning the coil about the two pivots. A light aluminium pointer attached to the coil indicates the magnitude of the current flowing by its movement over a fixed scale. The movement of the coil is restrained by two spiral springs which also serve as conductors to and from the coil. Pivots are provided with jewel bearings to reduce friction.

Two built-in resistances which are connected in series with the coil provide the two voltage ranges of the instrument. The total resistance for the 8 volt range is 20,000 ohms and the total resistance for the 80 volt range is 200,000 ohms. The meter has three terminals, one being a common positive for both ranges, the other two terminals are negatives for the 8 volt and 800 volt ranges.

(b) (i) Resistance Test.—Fig. 2 shows the circuit used for the measurement of loop resistances. The line to be tested is connected to the circuit by the operation of appropriate keys on the test desk. For the measurement of resistances between 0 and 12,000 ohms, the 48V volt exchange battery is used with an 800 ohms series resistance and the 8 volt range of the meter. The meter is shunted by a resistance of 161.29 ohms, giving a total resistance of 100 ohms for the combination. When the test leads are short circuited, the voltage drop across the meter is 8 volts, and when the leads are open circuit the meter reads zero. By means of a suitable chart the meter readings can be converted to resistance readings without resort to mathematical calculations. The formula for calculating the resistance is as follows:—

$$R = V(D/D1 - 1)$$

Where R = Resistance under test
V = Resistance of voltmeter system
D = Deflection of voltmeter with zero resistance in series
D1 = Deflection of voltmeter with unknown resistance in series.

(b) (ii) Insulation Resistance.—Fig. 3 shows the circuit which is used for the measurement of insulation resistance. This circuit is generally similar to that used for the resistance test with the following alterations:—A 400 volt special supply is provided to detect insulation breakdown caused by the high voltages encountered during dialling. The high voltage also extends the range of the test. The 400 volt supply is usually obtained from the power mains by means of a transformer and dry rectifier. The 80 volt meter range is used in this test and an 800,000 ohms series resistor is provided to protect the operator against shock, and also to safeguard the meter. The resistance range of this circuit is from 20,000 ohms to 97 megohms, the actual value of the insulation resistance being determined by reference to a chart which converts meter deflection to equivalent ohm resistance. The same formula holds for this test as for the resistance test.

Q. 2.—(a) Draw a sketch showing the components of a secondary cell (accumulator) of the open type with a capacity of approximately 100 ampere hours at the normal rate of discharge.

(b) What is an hydrometer? How is it used in checking the working of a secondary cell?

A.—(a) Fig. 1 shows a typical secondary cell having a capacity of approximately 100 Ah. The plates are 6⅞ ins. high and 6⅝ ins. wide, and to give this capacity 4 negatives and 3 positives are required.

(b) The hydrometer is an instrument used to measure the specific gravity or density of a liquid. There are several forms of the instrument, but that in general use consists of a thin glass tube blown out at one end into a long flat bulb to give it buoyancy. As the tube has to float upright in the liquid in which it is placed, the lower part of the bulb is usually weighted with wax and lead shot. The stem of the hydrometer which projects from the bulb, has fastened inside it a scale on which is marked the range of specific gravities which the instrument has been designed to measure. When placed in a liquid the instrument will float vertically with the stem upright and the length of the stem which projects above the surface of the liquid is a measure of its specific gravity. The lower the hydrometer floats, the lower will be the specific gravity of the liquid. By comparing the level of the liquid on the stem with the scale which is provided inside the stem, the value of the specific gravity can be read off directly.

As a consequence of the chemical changes which take place in the electrolyte of a secondary battery during the charging and discharging periods, the specific gravity of the electrolyte varies between fairly wide limits. When fully charged, the specific gravity of the electrolyte approximates to 1·210, while when discharged the S.G. is approximately 1·160. By choosing a particular cell of a battery, a fairly accurate check on its condition of charge and discharge may be maintained by measuring the specific gravity of the electrolyte. This is most conveniently done with the hydrometer which has been described above. The hydrometer is floated in the electrolyte in association with a thermometer. The thermometer is necessary as the S.G. is dependent upon the temperature and a correction must be applied as the temperature varies from 60° F.

Q. 3.—What are the chief mechanical features in which a 2000 type group selector differs from a pre-2000 type?

A.—The main differences are:—

The 2000 type:—

(1) Magnets— has two single coil magnets, one vertical and one rotary.

(2) Release—is effected by the forward rotation of the wipers to the 12th position, whence the wipers drop vertically and return to normal by means of a spiral spring inside the wiper carriage shaft.

(3) Shaft—The vertical shaft is fixed at both ends. The wipers are attached to a cylindrical carriage which slides on the fixed shaft.

(4) Vertical and rotary hubs—The vertical and rotary teeth are placed side by side, occupying the same vertical section of the shaft. The vertical teeth comprise a narrow fillet which moves out of alignment with the vertical pawl at the first rotary step.

(5) Comb and cam—used to support weight of wiper carriage during the rotary movement.

(6) Mechanically operated springs — operated by means of cam and roller.

(7) Interrupter springs—a toggle device is used to ensure more rapid movement.

(8) Mechanical adjustments—can be made from the front of the switch.

(9) Adjustment screws—In general, friction locks are used.

(10) Removal of switch—The switch can be removed from the shelf by jacking it in or out as required.

(11) Banks—are supported from switch cradle.

The pre-2000 type:—

(1) Magnets—has two double coil for vertical and rotary and one single coil for release.

(2) Release—is effected by the operation of the release magnet. The shaft rotates backwards to rotary normal by the tension of the cup spring at the head of the shaft, and falls vertically due to gravity.

(3) Shaft—The shaft is movable. The wipers are rigidly attached to the lower portion of the shaft.

(4) Vertical and rotary hubs—The vertical hub is placed above the rotary hub. The rotary teeth occupy almost the full circumference of the hub.

(5) The shaft support—The shaft is supported on detents.

(6) Mechanically operated springs—are operated by means of levers.

(7) Interrupter springs—are operated by an extension of the armature.

(8) Mechanical adjustments—To make some adjustments, it is necessary to remove the switch from the shelf.

(9) Adjustment screws—Lock nuts are generally used on adjustment screws.

(10) Removal of switch from shelf—The bank rod nuts must be removed and the switch eased off the bank. The wipers must be readjusted each time a switch is removed and replaced.

(11) Banks—Banks are supported from the switch frame.

Q. 4.—Detail the adjustments which should be made to ensure correct operation of the following parts of a bimotional switch:—

(1) The rotary magnet.

(2) The line wipers.

A.—The adjustments described hereunder relate to a pre-2000 type switch for 50 volt working.

(1) Rotary Magnet.—The magnets should be adjusted by means of the rotary magnet adjusting glands so that, with the armature operated electrically, there is a clearance of 6 plus or minus 4 mils between the short faces of each rotary notch and the front faces of the rotary detent. The clearance should be checked on level 5. The adjustment should be such that, when operated, the armature is in contact with both cores. This condition should be checked by

operating the rotary magnet electrically and observing that there is not a clearance between either core and the armature.

(2) Line Wipers:—With the shaft in the normal position, the tension of the wiper springs shall be such that the insulation separators are at right angles to the shaft, and that each spring has a reasonable follow when the other of a pair is diverted away from the separators. The wipers should be formed so that there is a space of approximately ⅛ in. between the inner faces of the springs just in front of the hub of the wiper assembly. They should enter the banks on any level without causing appreciable rise or fall in the general level of the wiper assembly. The wiper tips should rest approximately centrally on the first and last bank contacts of the first and tenth levels. With the shaft restoring spring bracket pressed against the left hand side of the normal post, the wiper tips shall be clear of the projecting bank insulation when the shaft is raised vertically to the limit of its movement. There should be a gap of 16 plus or minus 6 mils between the tips of the wipers when off the bank. Pressure exerted by the individual wiper springs on bank contacts is measured by means of a tension gauge. The first contact of the fifth level is used for test purposes. The pressure measurements are made at the angular set of the wiper spring. For line wipers, the normal contact pressure is 35 grammes and the values for adjustment are minimum 30, maximum 40 grammes. A slight variation of the tension of a wiper spring can be made with the wipers resting on the fifth contact of level five by applying bent duckbill pliers to the root of the spring and lightly setting it inwards to increase or outwards to decrease the pressure. If the pressure is to be varied by an amount exceeding 10 grammes, the wiper spring should be re-tensioned when off the bank.

(To be continued.)

EXAMINATION NO. 2295.—ENGINEER—TRANSMISSION

V. F. Reeves, B.E.E.

Q. 3.—A circuit in an underground cable on which a carrier telephone system is to work has attenuation-frequency characteristics which it is desired to correct by the use of a network. Describe such a network and illustrate your reply with a schematic diagram. The basis of the design should be given and also the relationship which must exist between the various impedance elements and the impedance of the network.

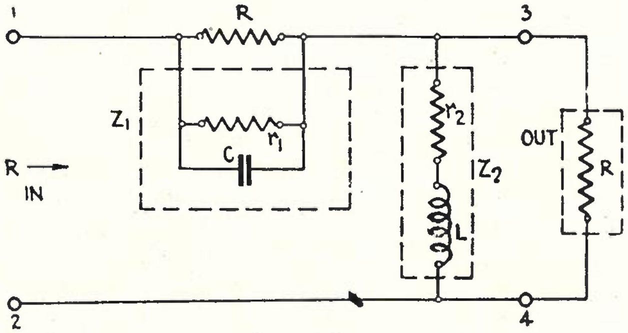

Q. 3, Fig. 1.

A.—The object of any frequency attenuation connecting network, or equalizer, as it is more commonly called, is to insert in a circuit, loss characteristics such that the overall attenuation for the frequency band under consideration will conform to some previously determined form.

In the case under consideration it can be presumed that the inserted gain of the carrier telephone terminals and repeaters is constant over the frequency band and it is necessary only to correct for the attenuation characteristics of the cable circuit. This correction can usually be accomplished by means of a network illustrated in Fig. 1, one or more sections being used as required. These networks have a constant impedance at all frequencies and can, therefore, be inserted between line and equipment without causing reflection loss.

A typical curve of insertion loss versus frequency for unloaded cable pairs is illustrated as Curve A in Fig. 2, and the equalizer must be designed with loss characteristics, such that the overall circuit attenuation inclusive of the equalizer will remain constant irrespective of frequency. The equalizer must, therefore, be designed to have loss characteristics as indicated in Curve B and the total circuit loss will be the sum of the two, i.e., practically constant.

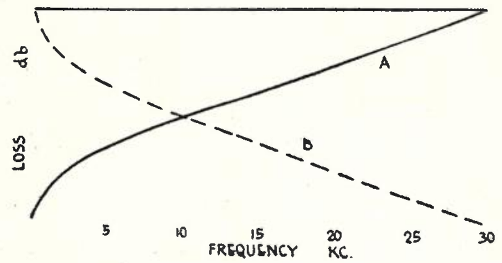

Q. 3, Fig. 2.

Referring to Fig. 1, the impedances Z_1 and Z_2 are designed so that when terminated in a constant impedance they will present the same impedance at their terminals. Z_1 and Z_2 are, therefore, designed to be inverse with respect to R the iterative impedance of the system,

$$\text{or } Z_1 Z_2 = R^2 \ldots\ldots\ldots\ldots\ldots\ldots\ldots \quad (1)$$

$$\text{The input impedance} = \frac{RZ_1}{R + Z_1} + \frac{RZ_2}{R + Z_2}$$

$$= \frac{RZ_1}{R + Z_1} + \frac{RX\dfrac{R^2}{Z_1}}{R + \dfrac{R^2}{Z_1}}$$

$$= \frac{R\ (R + Z)}{R + Z}$$

$$= R \ldots\ldots\ldots\ldots\ldots\ldots\ldots\ldots \quad (2)$$

$$\text{The attenuation ratio} = \frac{R}{\dfrac{RZ_2}{R + Z_2}}$$

$$= \frac{R + Z_2}{Z_2} - \frac{R + Z_1}{R} \ldots\ldots \quad (3)$$

The attenuation of the network

$$= 20 \log_{10} \left(\frac{R + Z_1}{R}\right) \text{ db.} \ldots\ldots \quad (4)$$

Equation 4 forms the basis of design for the various components of the network and this equation is usually reduced to a simpler form by a process developed by Zobel.

By using these simplified equations and substituting in them values of frequency and attenuation as given by Curve B, Fig. 2, the value of all components may be calculated.

Q. 7.—Design a two section high pass filter which is to be used in a 600 ohm circuit. It is to have a cut-off of 3,000 cycles per second and its maximum attenuation in the attenuated band shall be fixed at 2,400 cycles per second.

A.—To design a filter of the type required it is the usual practice to proceed as follows:—

(i) Design the elementary or prototype form with the desired cut-off frequency.

(ii) Design an "m" derived section having a shunt arm resonant at the frequency where maximum attenuation is required.

(iii) Design end sections in the form of a half π networks with a value of "m" = 0.6 in order to provide a constant impedance for the filter over the major portion of the frequency range.

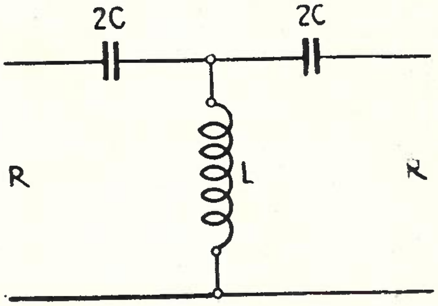

Q. 7, Fig. 1.

(i) Design of prototype:—The form of the simple section for a high pass filter is shown in Fig. 1 and the values of capacity and inductance are determined from the formulae:

$$L = \frac{R}{4\pi f_c} \quad \ldots\ldots \quad (1)$$

$$C = \frac{1}{4\pi f_c R} \quad \ldots\ldots \quad (2)$$

$$\therefore L = \frac{600}{4\pi (3000)} = .01592 \text{ henry}$$

$$= 15.92 \text{ millihenry}$$

$$C = \frac{1}{4\pi \times 3000 \times 600} = .0442 \times 10^{-6} \text{ Farad}$$

$$= .0442 \mu f.$$

(ii) Design of "m" derived section:—The equivalent "m" derived section is obtained from the formulae:

$$m = \sqrt{1 - (fr/fc)^2} \quad \ldots\ldots \quad (3)$$

where fr = frequency at which maximum attenuation occurs

fc = cut-off frequency

therefore

$$m = \sqrt{1 - (2400/3000)^2}$$

$$= 0.6.$$

The form of this section is shown in Fig. 2 and the values of the various elements are obtained from the formulae as indicated:

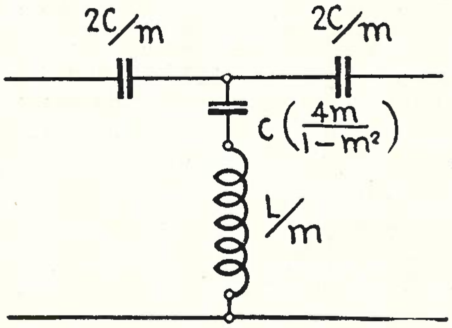

Q. 7, Fig. 2.

$$\frac{2C}{m} = \frac{0.0884}{0.6} = 0.1474 \text{ mf}$$

$$C \frac{(4m)}{(1 - m^2)} = 0.0442 \frac{(2.4)}{(1 - 0.36)} = 0.166 \text{ mf}$$

$$\frac{L}{m} = \frac{15.92}{0.6} = 26.534 \text{ mil. hen.}$$

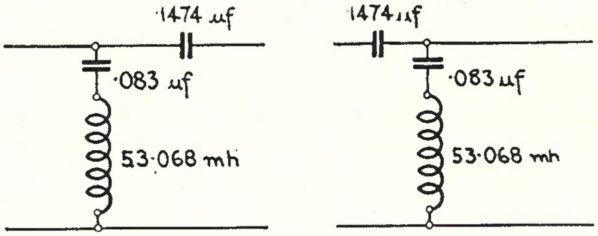

Q. 7, Fig. 3.

(iii) Design of End Sections:—The end sections will have the general form shown in Fig. 3 and since the value of "m" is 0.6 in this case the values of the components have already been determined above and the values of the various elements are, therefore, shown.

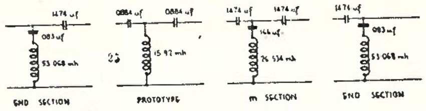

Q. 7, Fig. 4.

The form of the filter will be as shown in Fig. 4; or combining the sections we get the final network as shown in Fig. 5.

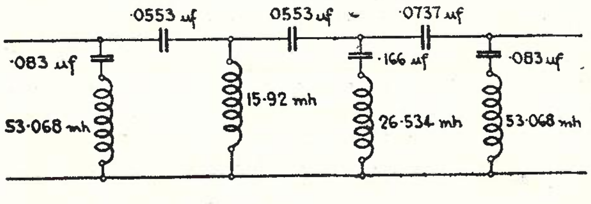

Q. 7, Fig. 5.

The general attenuation characteristics of the various sections and of the combined filter will be as shown in Fig. 6.

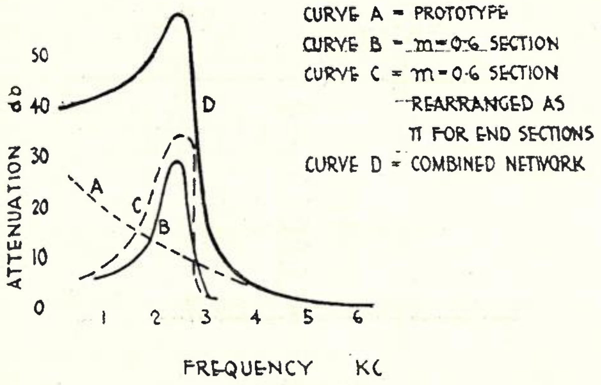

Q. 7, Fig. 6.

Q. 8.—Describe, with the aid of a block schematic diagram, the arrangement at a terminal station of one channel only of a 3-channel carrier telephone system and the office equipment associated with that channel.

A.—Fig. 1 shows a block schematic of the various components making up one channel of a 3-channel telephone system, together with other office equipment usually associated with such a terminal. The equipment enclosed inside the dotted lines comprises the carrier terminal, and will apply to either A or B terminal. The only difference in the two being that whereas an A terminal transmits frequencies of between approximately 6 kC to 16.3 kC and receives frequencies of between approximately 17 kC to 30 kC, the B terminal receives the frequency band transmitted by the A terminal and transmits the A terminal's received band.

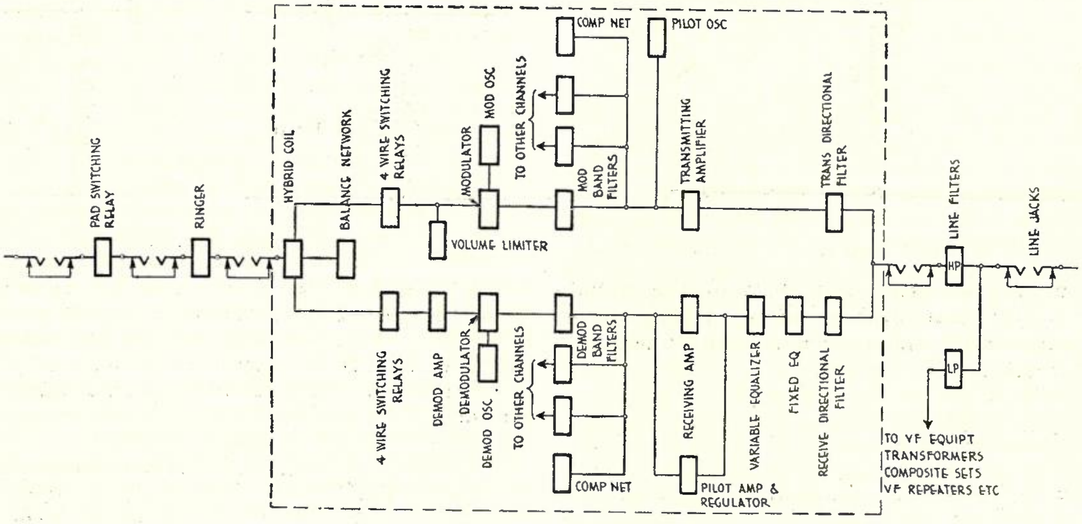

Q. 8, Fig. 1.

Each channel of the terminal operates as a 4-wire circuit from the hybrid or 4-wire termination on the V.F. side to the directional filters on the line side. Voice frequency currents entering the hybrid have half their energy dissipated and half transmitted to the channel modulator.

A volume or voltage limiter is placed between the hybrid and modulator in order to limit excessive voltage peaks from speech inputs, and where V.F. telegraphs are operated over the system, its use on all channels other than those carrying the V.F. telegraph systems is essential in order to prevent interference to these systems.

At the modulator, the voice frequencies are impressed on the output from the carrier oscillator, and the wanted products—upper or lower sideband—are transmitted through the modulator band filter which also attenuates all unwanted products. All other channels are commoned on the output side of these filters, and are then wired to the transmitting amplifier which is adjustable to give the required sending gain. The carrier frequencies then pass to line through the transmitting directional filter which is a low pass filter with a cut-off frequency of approximately 16 to 17 kC for the A terminal and a high pass filter with approximately the same cut-off frequency at the B terminal.

In the receive circuit, the carrier frequencies pass through the receive directional filter, a complement of the transmitting directional filter, to a line equalizer which in later systems is divided into fixed and variable units, thus permitting the frequency attenuation characteristics of any line on which the system may operate to be corrected. From the equalizer the currents pass to the receive amplifier, which is adjusted to feed the received power at the correct level into the demodulators via the channel demodulator band filters. The demodulator units which are usually equipped with a channel equalizer to correct any distortion introduced by the system convert the carrier frequencies back to voice frequencies. They are usually followed by a demodulator amplifier which enables the received gain of each individual channel to be adjusted to its correct level. From this unit the received power passes to the hybrid, where received and transmitted power are again combined in a 2-wire circuit.

The associated office equipment comprises, on the line side, a set of line filters which separate carrier frequencies from voice frequencies. On the switchboard side, switching pads or relays enabling 4-wire through connections may be provided.

From these the circuit is cabled to a voice frequency ringer which is operated by a normal ringing key on the trunk switchboard, and transmits 1000 cycles interrupted at 17 cycles through the system to line. This unit is also equipped with tuned circuits, amplifier and rectifier, enabling it to accept the same frequencies from the distant terminal, rectify them, and operate a relay and calling signal on the local trunk switchboard.

The break jacks shown are usually located on the trunk test board, and, for simplicity, no system jacking has been indicated in the sketch.

Q. 9.—(a) Give a circuit diagram of a 2-wire repeater and describe its operation.

(b) With the aid of a sketch, explain the operation of a hybrid transformer.

A.—(a) The simplified circuit of a standard 2-wire repeater is shown in Fig. 1. The equipment consists of two hybrid coils from which a 4-wire circuit is derived, and in this derived circuit a unidirectional single stage voice frequency amplifier is inserted in each path. Since both "go" and "return" circuits are exactly similar, a description of the circuit in one direction only is given.

Currents from line W enter the hybrid coil, half the energy being absorbed in the plate circuit and half transmitted to the potentiometer P. The gain of this path is adjusted by varying the setting of the potentiometer and any desired fraction of the received power can be transmitted to the input transformer T_1.

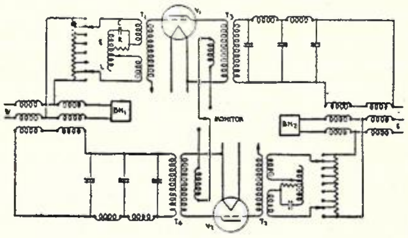

Q. 9, Fig. 1.

Some form of equalizer is usually provided to compensate for both the line and repeater frequency attenuation characteristics. One such form is shown as E inserted in the mid-point of the primary of Transformer T_1, the condenser C and the inductance of the primary winding being tuned to resonance at approximately 200 c.p.s., while the resonance effect is "flattened" by means of the parallel resistance R. Similarly, by varying the inductance L, the gain above approximately 800 cycles can be decreased or increased.

The output from transformer T_1 is impressed on the grid of the amplifier valve, the plate of which is connected to an output transformer T_3. The secondary winding of this transformer is connected to a low pass filter F having a cut-off frequency somewhere between 2.2 and 3 kC, depending on the type of circuit on which the repeater is to operate.

The maximum gain of the repeater is dependent on the degree of balance obtainable between line and network—see description of the hybrid transformer—and under perfect conditions the attenuation across the hybrid between "go" and "return" circuits is infinity. As the degree of unbalance increases, however, this attenuation also decreases until a condition arises where the inserted gain of the amplifier is greater than the loss through both hybrids, at which point the repeater will "sing" round.

The purpose of the filter F is to restrict the upper frequencies transmitted, and so limit the frequency band over which the line characteristics must be simulated by means of the balance network BN. One form of monitoring is shown, but various other methods, such as additional windings on the hybrid coils, may be adopted.

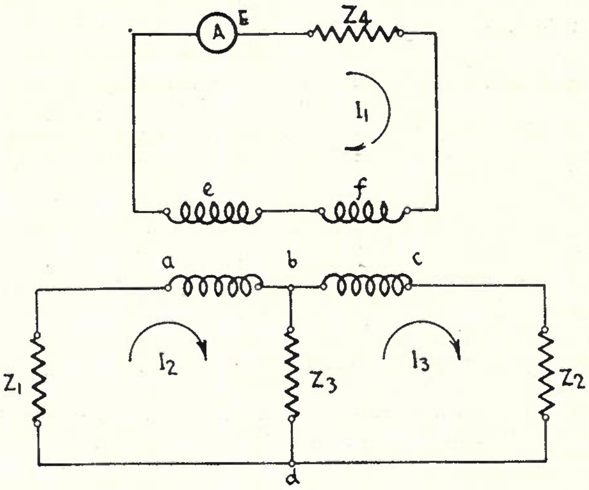

Q. 9, Fig. 2.

(b) Fig. 2 represents the simplest form of hybrid coil with windings a b, b c, and e f. Z_1 and Z_2 represent the impedance of line and net respectively, Z_3 and Z_4 the impedance of go and return path. If in the return path a generator is inserted in series with the impedance Z_4 no current will flow in Z_3, providing the circuit is correctly designed. The generated and induced currents are represented by I_1, I_2, and I_3 and since in Z_3, I_2 is equal and opposite to I_3 there is no resultant current flowing in this branch. This condition is accomplished if windings ab and bc are made similar in all respects and Z_1 made $= Z_2$.

If the impedances are such that winding ab and bc $= Z_3 = \frac{1}{2}Z_1 = \frac{1}{2}Z_2$ and the generator is considered connected in series with Z, then the voltage drop between a and b will be equal to the voltage drop between b and d. The input power will, therefore, divide into two equal parts, one half being dissipated in Z_3 and the other half in Z_4.

The current flowing in winding ab induces a voltage in winding cb and since the coils are symmetrical this induced voltage has the same value:—

i.e., Voltage drop in ab = induced voltage drop in cb, but in addition Voltage drop in ab = induced voltage drop in bd; therefore the voltage across cd = 0 and no current will flow in Z_2.

From the above it will be seen that only half the received power is transmitted through the hybrid and the loss of the transformer is, therefore, 3 db. In actual practice, because of imperfections, this figure is slightly increased.

EXAMINATION NO. 2377.—ENGINEER—NATURAL SCIENCE

E. H. Palfreyman, B.Sc., B.E.

Q. 9.—Calculate the weight of coal required to convert a quantity of ice at 0° C. into 7.5 cubic meters of steam at 100° C. and normal atmospheric pressure given—

(a) Latent heat of fusion of ice = 80 calories per gram.

(b) Latent heat of vaporization of water = 500 calories per gram.

(c) Heat value of coal = 250 calories per gram.

(d) The expansion ratio of water to steam at normal atmospheric pressure = 1 : 1500.

A.—

$$\text{Volume of steam} = 7.5 \text{ cubic meters} = 7{,}500{,}000 \text{ ccs.}$$

$$\text{thus Volume of water} = \frac{7{,}500{,}000}{1500} = 5000 \text{ ccs.}$$

$$\text{and Mass of Water} = \frac{5000}{1} = 5000 \text{ gms.}$$

$$\begin{aligned}\text{Heat required} &= M(L_F + s(t_2 — t_1) + L_E) \text{ cals.}\\ &= 5000\ (80 + 1 \times 100 + 500)\\ &= 5000 \times 680\\ \text{Coal required} &= \text{Heat req./Calorific value of coal}\\ &= 5000 \times 680/250\\ &= 13{,}600 \text{ gms.}\end{aligned}$$

Q. 10.—The distance from a simple double convex lens to the plate in a camera was found to be 8 cm. at sharp focus and the image was one-quarter the height of the object. Find the focal length of the lens. Illustrate your answer with a diagram.

A.—The positions of the image, object and focus are shown diagrammatically in Fig. 3.

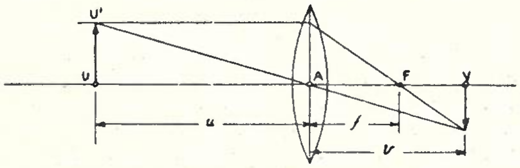

Q. 10, Fig. 1.

Assuming distances on right and left of A to be +ve and —ve respectively—

$$\text{Distance of image} = v = +8 \text{ cms.}$$

$$\begin{aligned}\text{Distance of object} &= u = —v \times \frac{\text{ht. of object}}{\text{ht. of image}}\\ &= —8 \times \frac{4}{1} = —32\end{aligned}$$

Total length of lens is given by

$$\begin{aligned}1/f &= 1/v — 1/u\\ \text{i.e., } f &= uv/(u — v)\\ &= \frac{(—32) \times 8}{(—32) — 8} = \frac{—256}{—40}\\ &= + 6.4 \text{ cms.} \quad \text{.... .... Ans.}\end{aligned}$$

Q. 11.—(a) Indicate by an equation the two properties of a homogeneous medium on which the velocity of propagation of a longitudinal wave in such a medium depends.

(b) Calculate the velocity of sound in air given the following:—

Ratio of specific heats = 1.4

Pressure of air = 1.089 × 10⁶ dynes per sq. cm.

Density of air = 0.0014 grams per cub. cm.

A.—(a) In a homogeneous medium the velocity V depends on the pressure P and the density D together with the ratio of specific heats which is a constant for a particular gas and the equation relating these quantities is as follows:—

$$V = \sqrt{\frac{XP}{D}}$$

(b) In question

$$\begin{aligned}V &= \sqrt{\frac{1.4 \times 1.089 \times 10^6}{0.0014}}\\ &= 1089 \times 10^6\\ &= 33{,}000 \text{ cms./sec.}\end{aligned}$$

Q. 12.—Write down in the form of chemical equations the primary reactions involved in the production of the following:—

(a) Caustic Soda by the electrolysis of Brine.

(b) Washing Soda from Sodium Bi-Carbonate by heating.

(c) Quicklime from Limestone.

(d) Slaked Lime from Quicklime.

A.—

(a) $2\,NaCl + 2\,H_2O \longrightarrow 2\,NaOH \text{ (cathode)} + Cl_2 \text{ (Anode)} + H_2$

(b) $2\,Na\,HCO_3 \longrightarrow Na_2CO_3 + H_2O + CO_2$

(c) $Ca\,CO_3 \longrightarrow Ca\,O + CO_2$

(d) $Ca\,O + H_2O \longrightarrow Ca\,(OH)_2$

EXAMINATION NO. 2377.—ENGINEER—LINE CONSTRUCTION

J. R. Newland

Q. 2.—Discuss the economic aspects of the preservative treatment of wood poles. Under what conditions would you apply such treatment to wood crossarms and spindles? Describe two or more methods of preserving wood poles from decay and attacks by termites, and state the advantages and disadvantages of each method. What is the periodicity of inspection of standing wood poles adopted by the Department; what is the method of examination and what tests are made during these inspections?

A.—Preservative treatment when properly applied gives two main advantages, namely:—

(a) An increase in the life of durable timber; and

(b) The possibility of using less durable species of timber which would not be considered suitable for poles without adequate treatment.

An increase in pole life must be carefully analysed and the extra initial cost of the pole, owing to its preservative treatment, computed in terms of the value of the increased life obtained. The initial cost of a pole in situ is composed of several items: the actual cost of the pole, the cost of transportation, fitting and erection of the pole, either as a new pole or as a renewal. Often extra expense in preservative treatment of the pole resulting in even only a small increase in pole life will pay when calculated over a period of years. Costs of maintenance on treated and untreated poles can be regarded as similar, the advantage, if any, being in favour of treated poles owing to the elimination of the cost of de-sapping at ground line.

The relative cost of untreated poles and poles treated according to various methods is compared by computing annual charges, the formula being—

$$A = \frac{P\ r\ (1 + r)^n}{(1 + r)^{n-1}}$$

Where A = Annual charge
P = Initial cost of pole in situ (i.e., inclusive of value of untreated pole, transportation, fitting and erection)
n = number of years of service
r = rate of interest expressed as a decimal.

Wood crossarms and spindles, by reason of their low initial cost compared with their value in situ, should always be subjected to preservative treatment with creosote. The relative ease of handling of these articles permits this to be done at small cost. Treatment is usually carried out at a depot adjacent to the work on which the material is to be used to avoid as much handling after treatment as possible. The method adopted is to place the articles in a bath of warmed creosote and then suspend to allow the superfluous liquid to drain off. By warming the creosote greater fluidity is obtained and the method, besides being economical in the consumption of creosote, allows cracks and bolt and spindle holes to be thoroughly treated.

The most satisfactory method in general practice of treatment of wood poles prior to erection is with creosote by the "hot and cold tank" method. By this method the poles are placed in an open tank containing hot creosote so that the length immersed is at least 2 feet in excess of the depth to which the poles will be placed in the ground. The temperature of the creosote is maintained at approximately 190-200° F. for a period of from 2 to 4 hours, depending on the moisture content of the timber. During the heating period, the air which is present in the wood cells expands and is partially expelled. The creosote is then allowed to cool to air temperature or, alternatively, the poles are placed in a similar bath of cold creosote. On cooling, the preservative is absorbed, the amount depending largely on the cooling period.

Penetration is affected by the time of the heating period, the temperature of the creosote, and the depth of sapwood. With Australian hardwoods it is extremely difficult to effect penetration of the truewood.

This method can only be applied to poles before erection. For standing poles, other and generally less effective means are applied. The chief disadvantage of the "hot and cold tank" method is that owing to the amount of gear required and the additional cost of cartage to the treatment depot, it is not generally economical to undertake treatment of a batch of poles less than one to two hundred. On the other hand, short of full length treatment, the method gives the most attractive results of any known, and second rate timbers when treated may give results comparable to those previously obtained from first rate timbers.

Treatment usually applied to standing poles is to spray with creosote through a semi-circular spray. The preservative is pumped by means of a small semi-rotary pump direct from a drum mounted on a truck. The spray is fitted at the end of a length of iron pipe; it is possible to treat approximately 18 ft. of the pole above ground level.

The chief advantage of this method is its ease of application, it being possible to treat at small cost all poles which are erected along a route which may be patrolled by a vehicle. Little more than a superficial application is given, but it is possible to inject fairly effectively the creosote into cracks and cavities in the pole. The treatment should be repeated at intervals usually of two years. Before treatment, care should be taken to see that the pole is effectively desapped.

The Award re Lines Staffs provides that all standing wooden poles should be inspected at least once in every 12 months.

The usual tests applied to wooden poles are as follow:—

(i) Knife test;
(ii) Chip test;
(iii) Sounding test.

These tests are applied at the ground line, as it is in this locality that decay usually begins.

The ground around the pole butt is first opened to a depth of 18 in. all round the pole.

(i) The knife test is made by prodding the pole with the point of a heavy knife in order to detect softness of the wood.

(ii) The chip test is made by removing a small chip of the pole timber and breaking across the grain with the fingers. If the timber is sound, the fracture will be irregular and the fibres will be clearly shown. On the other hand, if the wood is "dozy" or brittle the fracture will be short or "carrotty."

(iii) Sounding is carried out by striking the pole with a hammer or the back of an axe to detect internal hollowness due to termites or "piping." If serious hollowness is suspected the extent should be ascertained by boring with a small auger, the difference in the effort required to bore the pole giving the desired indication. All auger holes should be treated with creosote and plugged.

As a final precaution, the "push" test should be applied by the examining officer. This consists of pushing the pole with a pike or ladder applied as high as possible up the pole in a direction at right angles to the line of the wires.

Q. 3.—It is proposed to lay and joint a 600 pairs P.I.L.C. star quad cable in a new automatic exchange area. The cable is 2½ miles in length and has branches and lateral cables extending beyond for not more than half a mile to subscriber's premises.

(a) State what gauge of conductors should be used, and the reasons which govern the selection of the gauge required.

(b) What precautions would you take to ensure the correctness of the jointing of the conductors?

(c) What special tests would you make:—

(i) During the progress of the work;
(ii) After the jointing is completed;
(iii) When the lead sleeve is wiped;

to ensure the work has been performed correctly and in accordance with this Department's standards?

A.—(a) A new automatic exchange would be fitted with ballast resistors and, therefore, the maximum allowable exchange line resistance in accordance with Test Report No. 571 would be 540 ohms. The use of 10 lb. cable (176 ohms per loop mile) throughout would be within this limit, and should be used.

(b) To ensure that the cable pairs have been correctly jointed to the required branches, the cable should be terminated as early as possible during the progress of the work to the exchange M.D.F. after taking care that the joint between the paper and silk cables has been correctly formed and plumbed. It is then a simple matter to check from the M.D.F. to each branch as the jointing work proceeds to ensure that the correct main cable pairs appear in each branch cable and terminal.

(c) (i) During the progress of the work, the chief care is supervision to ensure that the practices adopted and the workmanship are of a high standard. Attention should be paid to the following:—

(a) The cable is stowed in the manhole neatly to allow of easy access to it and other cables, but not in such a position that it may be damaged during entrance or exit of workmen from the manhole. The cable should be laid in such a position that it does not cross or weave through other cables, and that sharp turns, kinks or excess length of cable are avoided.

(b) The sheath should be cleaned of foreign matter and cable pulling compound.

(c) Lamps or other devices should be in position to prevent moisture being absorbed by the core of the cable when work is being carried out.

[Continued on Cover ii.

Printed by Ruskin Press Pty. Ltd., 123 Latrobe Street, Melbourne.

BOARD OF EDITORS :

A. R. GOURLEY, A.M.I.E. (Aust.).
J. A. KLINE, B.Sc., A.M.I.E.E.
R. M. OSBORNE, M.E.E., A.M.I.E.E.

POLICY :

THE object of the Postal Electrical Society of Victoria is to promote diffusion of knowledge in the communication services of the Post Office.

In advancing this object by the publication of this Journal the Board of Editors is not responsible for the statements made or the opinions expressed in any of the articles in this Journal, unless such statement is made specifically by the Board.

Editors are welcome to use not more than one-third of any article provided credit is given at the beginning or end, thus:—From "The Telecommunication Journal of Australia."

DISTRIBUTION :

This Journal is available to members of the Postal Electrical Society of Victoria without charge. Other officers of the Postmaster General's Department may obtain copies of all publications of the Society on the payment in advance of 4/- p.a. Single copies of this Journal are available at 2/- each.

COMMUNICATIONS :

All communications should be addressed to:—

A. R. GOURLEY,
Hon. Secretary, Postal Electrical Society of Victoria,
G.P.O. Box 4050, Melbourne.

All remittances should be made payable to "The Postal Electrical Society of Victoria," and not negotiable.